REV.	DESCRIPTION	DATE
A	NEW DRAWING	11/17/2005

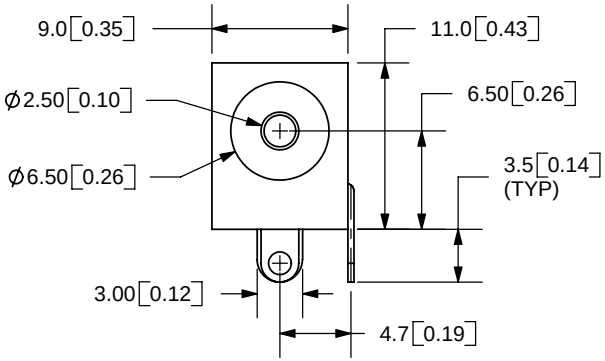

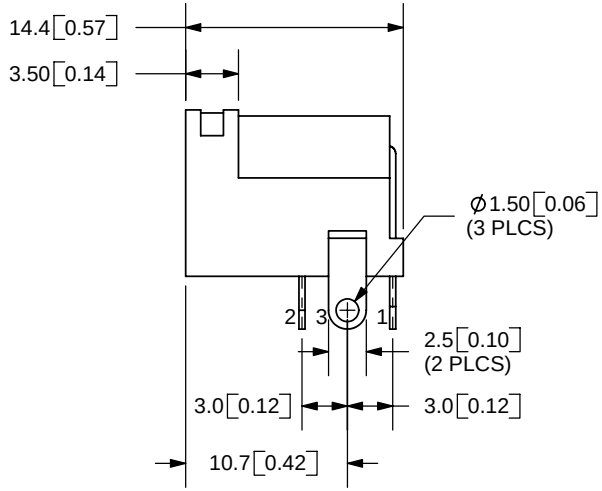

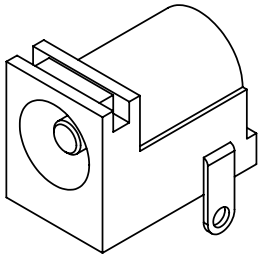

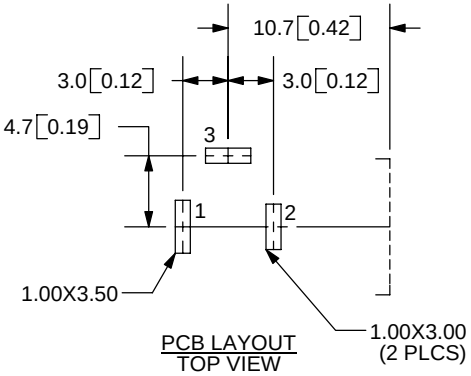

PCB LAYOUT
TOP VIEW

TOLERANCE:
X.X ±0.2mm
X.XX ±0.1mm
X.XXX ±0.05mm

RoHS
Compliant

MODEL NO.	PJ-002BH
SCHEMATIC	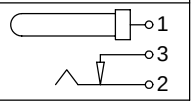

CENTER PIN DIAMETER 2.5mm Dia.

SPECIFICATIONS:
RATING: 24V DC @ 5A
CONTACT RESISTANCE: 50m OHMS MAX
INSULATION RESISTANCE: 50M OHMS MIN: 100V DC
VOLTAGE WITHSTAND: 500V AC R.M.S. FOR 1 MINUTE
LIFE: 5,000 CYCLES

	MATERIAL	PLATING
CENTER PIN	Copper	Nickel
TERMINAL 1	Brass	Silver
TERMINAL 2	Copper Alloy	Silver
TERMINAL 3	Brass	Silver
HOUSING	PBT	

CUI INC
9615 SW Allen Blvd., Ste. 103
Beaverton, OR 97005
Phone: 503-634-4899
800-275-4899
Fax: 503-372-1266
Website: www.cui.com

TITLE: DC POWER JACK		REV: A
PART NO. PJ-002BH	UNITS: MM [INCHES]	
DRAWN BY: ZRJ	APPROVED BY:	SCALE: 2:1

PC FILE NAME: PJ-002BH

COPYRIGHT 2005 BY CUI INC.