Freelander

Electrical Circuit Diagrams

LRL 0487ENX

FREELANDER
2002MY

Electrical Circuit Diagrams

Publication Part No. LRL 0487ENX
Published by Land Rover
© 2001 Land Rover

All rights reserved. No part of this publication may be reproduced, stored in a retrieval system or transmitted in any form, electronic, mechanical, recording or other means without prior written permission from Land Rover.

COLOUR CODES
DRAADKLEURCODES
CODES DES COULEURS DES FILS
KABELFARBCODES
CODICI COLORI DEI CAVI
CODIGOS DE COLORES DE LOS CABLES
CÓDIGOS DAS CORES DOS FIOS

CODE	COLOUR	CODE	KLEUR	CODE	COULEUR	CODE	FARBE	CODICE	COLORE	CODIGO	COLOR	CÓDIGO	COR
B	BLACK	B	ZWART	B	NOIR	B	SCHWARZ	B	NERO	B	NEGRO	G	PRETO
G	GREEN	G	GROEN	G	VERT	G	GRÜN	G	VERDE	G	VERDE	K	VERDE
K	PINK	K	ROZE	K	ROSE	K	ROSA	K	ROSA	K	ROSA	LG	ROSA
LG	LIGHT GREEN	LG	LICHTGROEN	LG	VERT CLAIR	LG	HELLGRÜN	LG	VERDE CHIARO	LG	VERDE CLARO	N	VERDE CLARO
N	BROWN	N	BRUIN	N	BRUN	N	BRAUN	N	MARRONE	N	MARRON	O	CASTANHO
O	ORANGE	O	ORANJE	O	ORANGE	O	ORANGE	O	ARANCIONE	O	NARANJA	P	LARANJA
P	PURPLE	P	PAARS	P	VIOLET	P	LILA	P	PORPORA	P	PURPURA	R	ROXO
R	RED	R	ROOD	R	ROUGE	R	ROT	R	ROSSO	R	ROJO	S	VERMELHO
S	SLATE (grey)	S	LEIGRIJS	S	GRIS	S	GRAU	S	ARDESIA (grigio)	S	PIZARRO (gris)	U	CINZENTO
U	BLUE	U	BLAUW	U	BLEU	U	BLAU	U	BLU	U	AZUL	W	AZUL
W	WHITE	W	WIT	W	BLANC	W	WEISS	W	BIANCO	W	BLANCO	Y	BRANCO
Y	YELLOW	Y	GEEL	Y	JAUNE	Y	GELB	Y	GIALLO	Y	AMARILLO	Y	AMARELO

CONTENTS

1 POWER DISTRIBUTION 6
Engine Compartment Fuse Box 6
Engine Compartment Fuse Box - NAS 12
Passenger Compartment Fuse Box 18
Passenger Compartment Fuse Box - NAS 24

2 EARTH DISTRIBUTION 30
NAS 36

3 ANTI-THEFT ALARM AND CENTRAL DOOR LOCKING 42

3 ENGINE IMMOBILISATION 46

5 WINDOWS 48
Front 48
Rear 50
Tail Door 52

6 SUNROOF 54

7 DOOR MIRRORS 56
Folding 58

8 SEATS 60
Heated 60

10 DIAGNOSTIC SOCKET 62

11 BODY CONTROL UNIT 64

15 CHARGING AND STARTING 68
K1.8 68
KV6 70
KV6 - NAS 72
Td4 74

20 ENGINE MANAGEMENT SYSTEM 76
K1.8 76
KV6 80
KV6 - NAS 84
Td4 88

20 FUEL PUMP 92

22 COOLING FANS 94

31 CRUISE CONTROL 96
Td4 and NAS 96
KV6 98

32 ELECTRONIC AUTOMATIC TRANSMISSION 100

35 ANTI-LOCK BRAKING SYSTEM (ABS) 104

36 SUPPLEMENTARY RESTRAINT SYSTEM (SRS) 106

38 AIR CONDITIONING 108
Td4 108
K1.8 and KV6 112
NAS 116

39 FUEL BURNING HEATER 120

39 HEATER 122

40 HEATED REAR SCREEN 124

40 HEATED FRONT SCREEN 126

42 WIPERS AND WASHERS 128
Front 128
Rear 130

43 EXTERIOR LAMPS 132
Brake and reverse lamps 132
Fog lamps - Rear 134
Direction indicator lamps\hazard warning 136
Head, side and tail lamps 138
Head, side and tail lamps - NAS 140
Head, side and tail lamps- Canada 142

44 INTERIOR LAMPS 146

46 INTERIOR ILLUMINATION 150

47 INSTRUMENTS 154

47 ROTARY COUPLER 158

48 HORN (S) 160

49 ACCESSORY SOCKET 162

49 CIGAR LIGHTER 164

50 AUDIO SYSTEMS 166
Low-Line 166
Mid-Line 170
High Line 174

60 HEADER JOINTS 178

65 SPLICES AND CENTRE TAPS 184

70 COMMUNICATION DATA BUSES 196

All of the information in this folder is intended for use with the Electrical Reference Library booklet.

The circuit diagrams are presented with Power and Earth distribution first, followed by individual circuits for each electrical system on the car.

Power Distribution
The Power Distribution diagram shows the connections from the battery to the engine and passenger compartment fuseboxes. It also shows the internal circuitry of the fuseboxes.

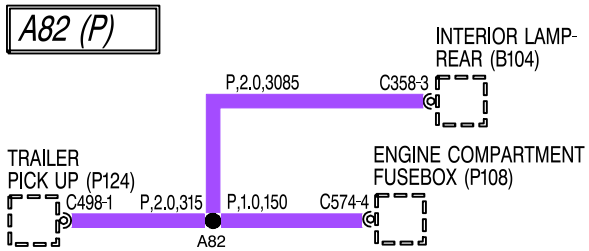

86M4227A

The fuse box details are followed by independent functionally specific circuits and then a Splices and centre taps section outlining the way in which internal harness splices and centre taps distribute power in the harnesses. This information should be used during diagnosis of electrical faults to check for symptoms in associated circuits and narrow down the search area.

Earth Distribution
The ground distribution section comprises a number of Headers and Splices tables. These are used in a similar manner to those in Power Distribution; to narrow the search area by checking for fault symptoms in associated circuits.

Splices and centre taps
Header and splice tables present the joint(s) and wiring up to the first component. Splices are identified by a number with an alphabetical prefix and the wire colour.

The splice information shown on individual system circuits is not complete. Always refer to the splices circuit for complete information on each splice.

Wire attributes
Additional information (separated by a ',') is shown alongside the wire colour:

Wire gauge - the cross-sectional area of the wire in square millimetres. This is included to help you select the correct wire during harness repair.

Some wires do not have a gauge shown, these wires are of unique construction and will have a three or four letter code printed after the colour code, eg MAB. The code identifies the type of wire for manufacturing purposes. Usually, only the first two characters have significance in service, but in some instances the third character also becomes significant, see table.

Wire type
The following table list the wire type codes together with an explanation of their meaning.

Code	Description
D	Single core DIN wire
F	Single core flexible wire
H	Single core high temperature wire
SA*	Single core resistive wire (0.9 ohms/m)
SB*, SC*, SD*	Single core dual extruded wire
SE*, SF*	Single core fusible wire
MAC, MAD, MAE, MAF, MAG, MAH	Coaxial screened wire
MB*, MO*, MAK	Single core screened wire
MC*, MI*, MP*, MQ*, MAB, MAP	Twin core screened wire
MD*, MJ*, MAM	Twin core ABS sensor wire
ME*, TA*, TB*, MM*, MN*, MU*,MAI	Twisted pair of wires
MF*	Heated oxygen sensor (HO2S) screened wire
MG*	Twin core twisted, screened wire
MH	four core twisted, screened wire
MK*	Three core SRS sensor wire
ML*, MAA, MAR	Four core screened wire
MR*	Six core screened, flexible wire
MS*	Four core screened, flexible wire
MT*	Single core screened, flexible wire
MV*	Twin core flat wire
MW*	Three core round wire
MX*, MY*	Seven core round wire
MZ*	Three core screened, flexible wire
MAJ	Twin core round cable
MAQ, MAU	Three core screened wire
MAS	Single core, double sheath wire
MAT	Double core, double sheath wire
MAL	SRS wire
MAN	Twin core braided, screened wire

HOW TO USE THE CIRCUIT DIAGRAMS

Wire length (Power & Earth Distributtion only)
The length of the wire in millimetres. This can be used to locate internal harness splices; look for the shortest wire between the joint and connector. For example, it can be seen that C574-4 is 150mm from joint A82.

Connectors

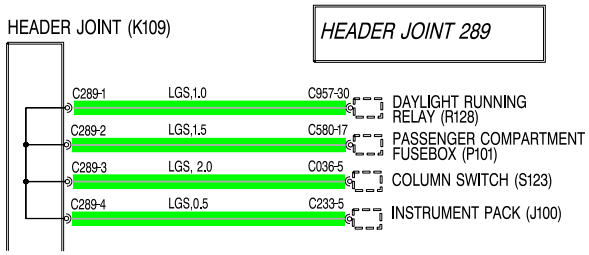

86M4228A

Header joints are identified by their corresponding connector number with a numbered suffix to indicate the pin-out detail of the wire, i.e. C289-1 identifies connector 289, pin number 1. Wire insulation colour is identified in the normal way. Where wires have a predominant colour with a secondary colour stripe, the main colour is identified first, i.e. LGS - Light Green with a Slate stripe.

Line Types

86M4229A

This means the wire connects to another circuit.

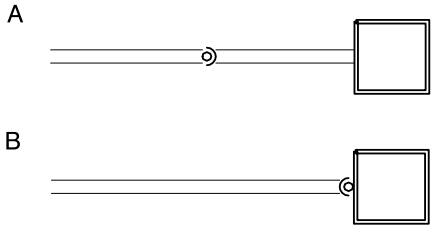

86M4230A

The cup and ball symbol indicates the male and female halves of connector.

A. Plug on lead (Flylead) wired directly to the component.

B. Connector plugs directly into component.

Components

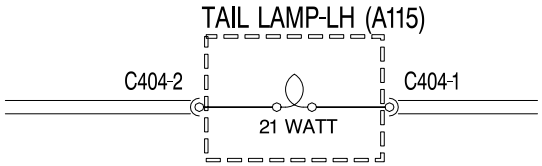

86M4231A

The name or description of the component is shown. A dotted outline indicates that the component is not shown in its entirety.

Earth points

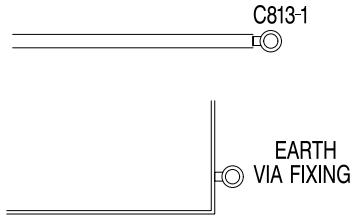

86M4232A

Earth points are identified with an eyelet symbol and a connector number, except where components are grounded through their fixings, when only the eyelet is shown.

Fuses and Diodes

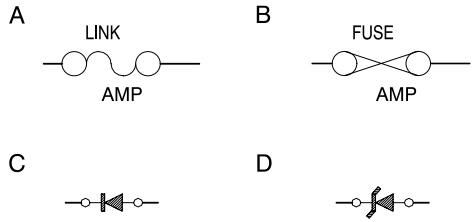

86M4234A

Fusible links (A) and current rated fuses (B) are identified as shown.

The direction of the arrow in a Diode symbol (C) indicates the direction of current flow. The Zener diode (D) - prevents current flow until a precise voltage is reached.

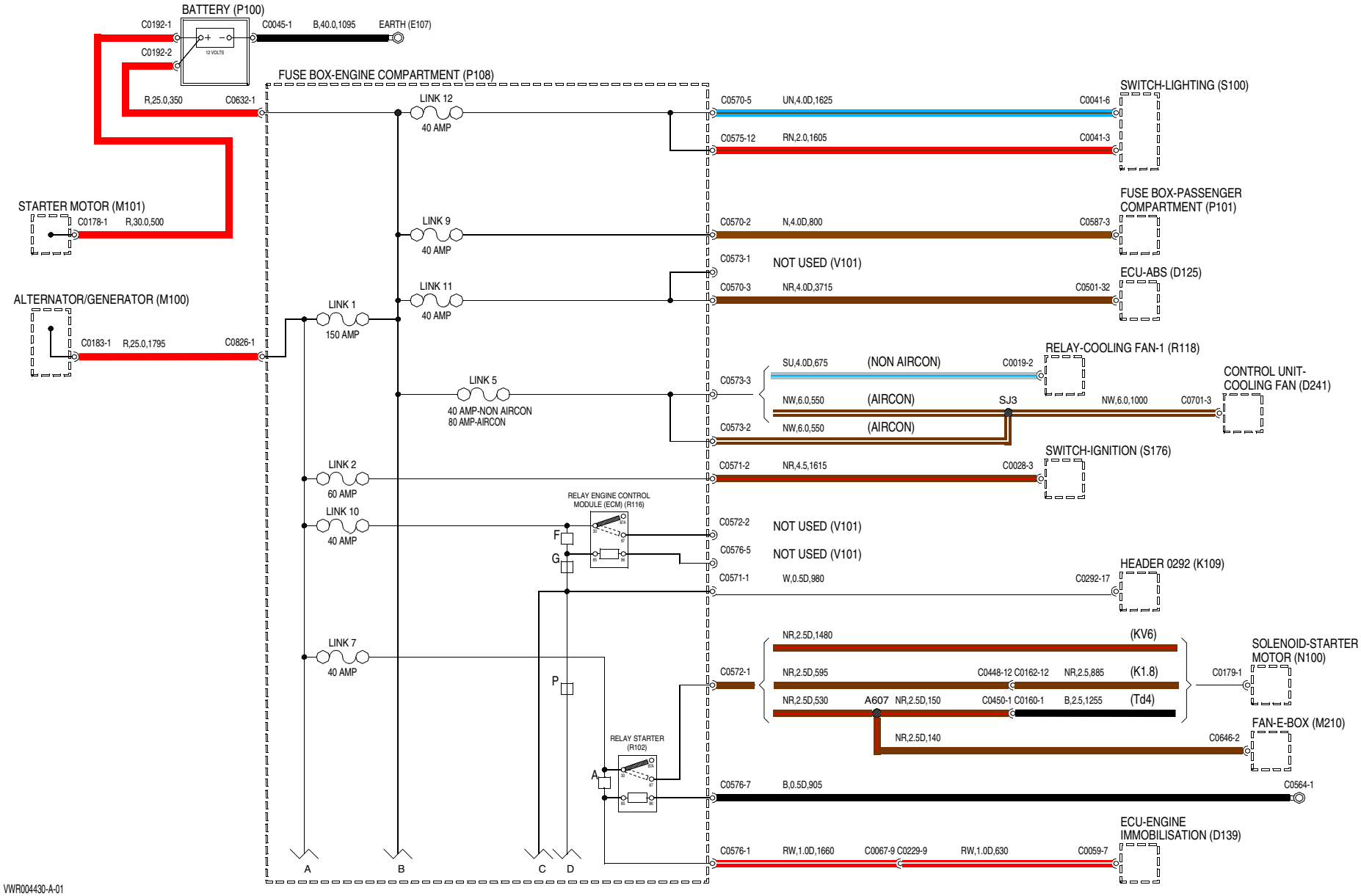
BATTERY (P100)
C0192-1
C0192-2
12 VOLTS
C0045-1
B,40.0,1095
EARTH (E107)
FUSE BOX-ENGINE COMPARTMENT (P108)
R,25.0,350
C0632-1
STARTER MOTOR (M101)
C0178-1
R,30.0,500
ALTERNATOR/GENERATOR (M100)
C0183-1
R,25.0,1795
C0826-1
LINK 12
40 AMP
LINK 9
40 AMP
LINK 11
40 AMP
LINK 1
150 AMP
LINK 5
40 AMP-NON AIRCON
80 AMP-AIRCON
LINK 2
60 AMP
LINK 10
40 AMP
LINK 7
40 AMP
RELAY ENGINE CONTROL MODULE (ECM) (R116)
RELAY STARTER (R102)
F
G
P
A
C0570-5
UN,4.0D,1625
C0041-6
SWITCH-LIGHTING (S100)
C0575-12
RN,2.0,1605
C0041-3
C0570-2
N,4.0D,800
C0587-3
FUSE BOX-PASSENGER COMPARTMENT (P101)
C0573-1
NOT USED (V101)
C0570-3
NR,4.0D,3715
C0501-32
ECU-ABS (D125)
C0573-3
SU,4.0D,675
(NON AIRCON)
C0019-2
RELAY-COOLING FAN-1 (R118)
NW,6.0,550
(AIRCON)
SJ3
NW,6.0,1000
C0701-3
CONTROL UNIT-COOLING FAN (D241)
C0573-2
NW,6.0,550
(AIRCON)
C0571-2
NR,4.5,1615
C0028-3
SWITCH-IGNITION (S176)
C0572-2
NOT USED (V101)
C0576-5
NOT USED (V101)
C0571-1
W,0.5D,980
C0292-17
HEADER 0292 (K109)
C0572-1
NR,2.5D,1480
(KV6)
NR,2.5D,595
C0448-12 C0162-12
NR,2.5,885
(K1.8)
NR,2.5D,530
A607
NR,2.5D,150
C0450-1 C0160-1
B,2.5,1255
(Td4)
C0179-1
SOLENOID-STARTER MOTOR (N100)
NR,2.5D,140
C0646-2
FAN-E-BOX (M210)
C0576-7
B,0.5D,905
C0564-1
C0576-1
RW,1.0D,1660
C0067-9 C0229-9
RW,1.0D,630
C0059-7
ECU-ENGINE IMMOBILISATION (D139)
A
B
C
D
VWR004430-A-01

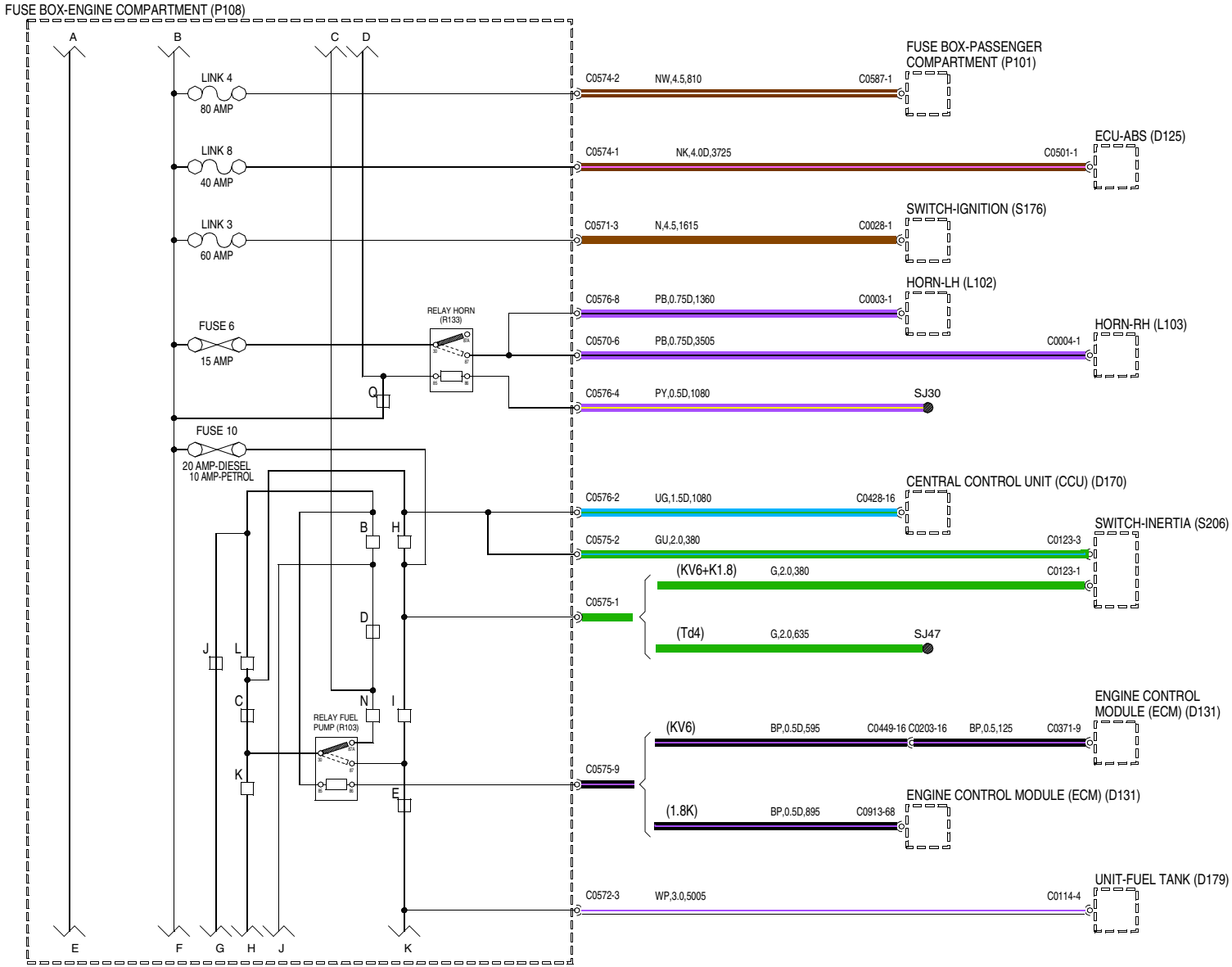

VWR004430-A-02

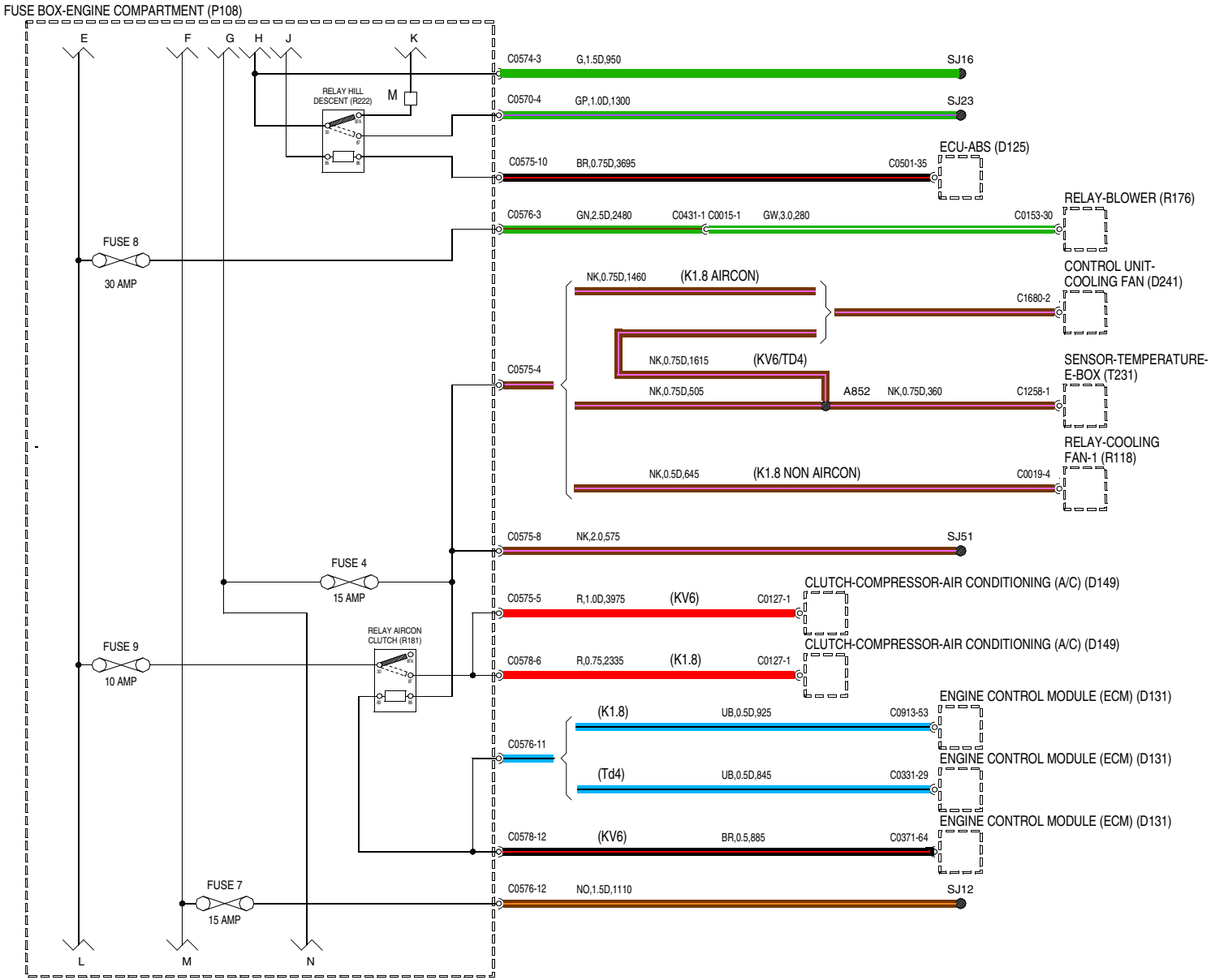

VWR004430-A-03

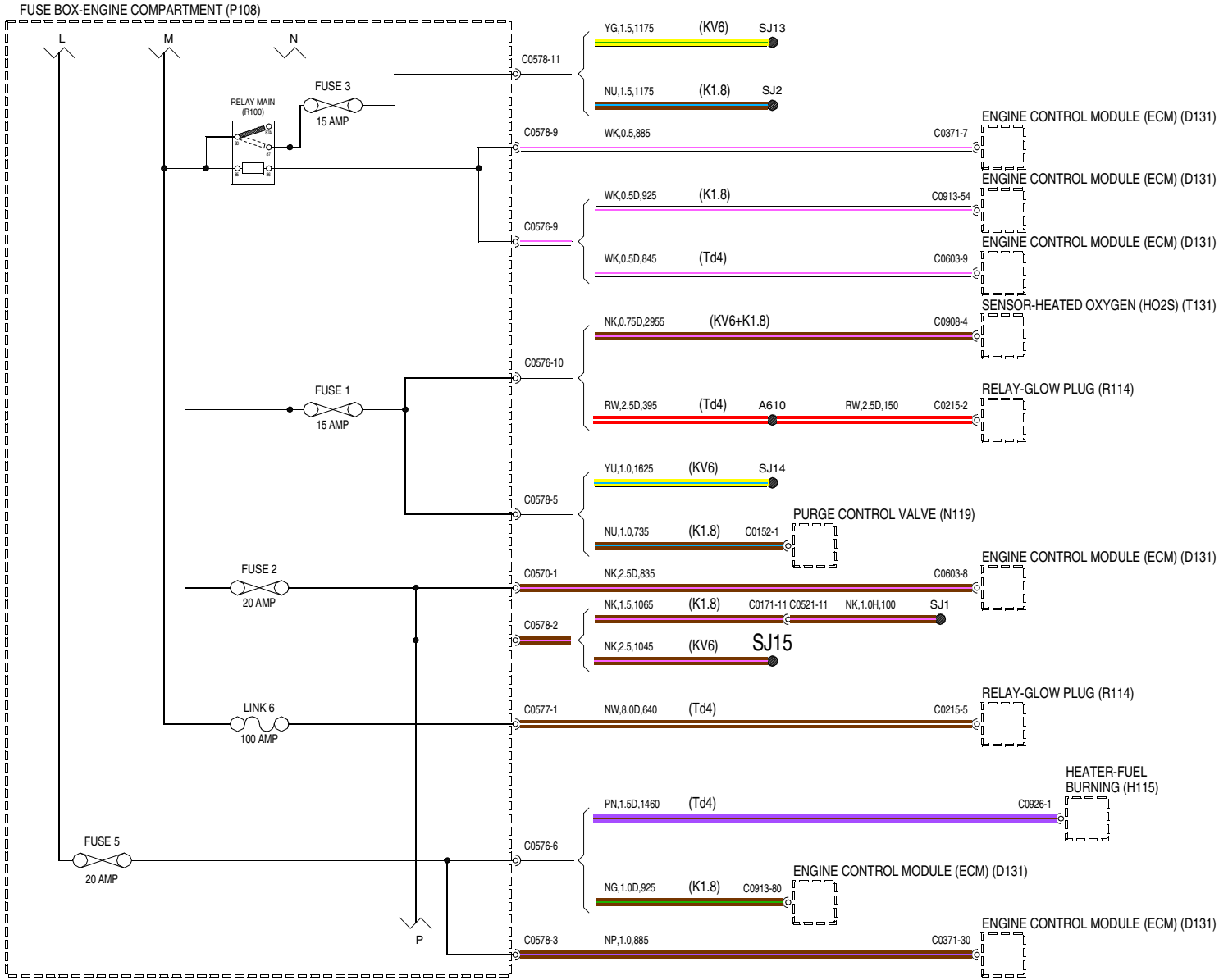

VWR004430-A-04

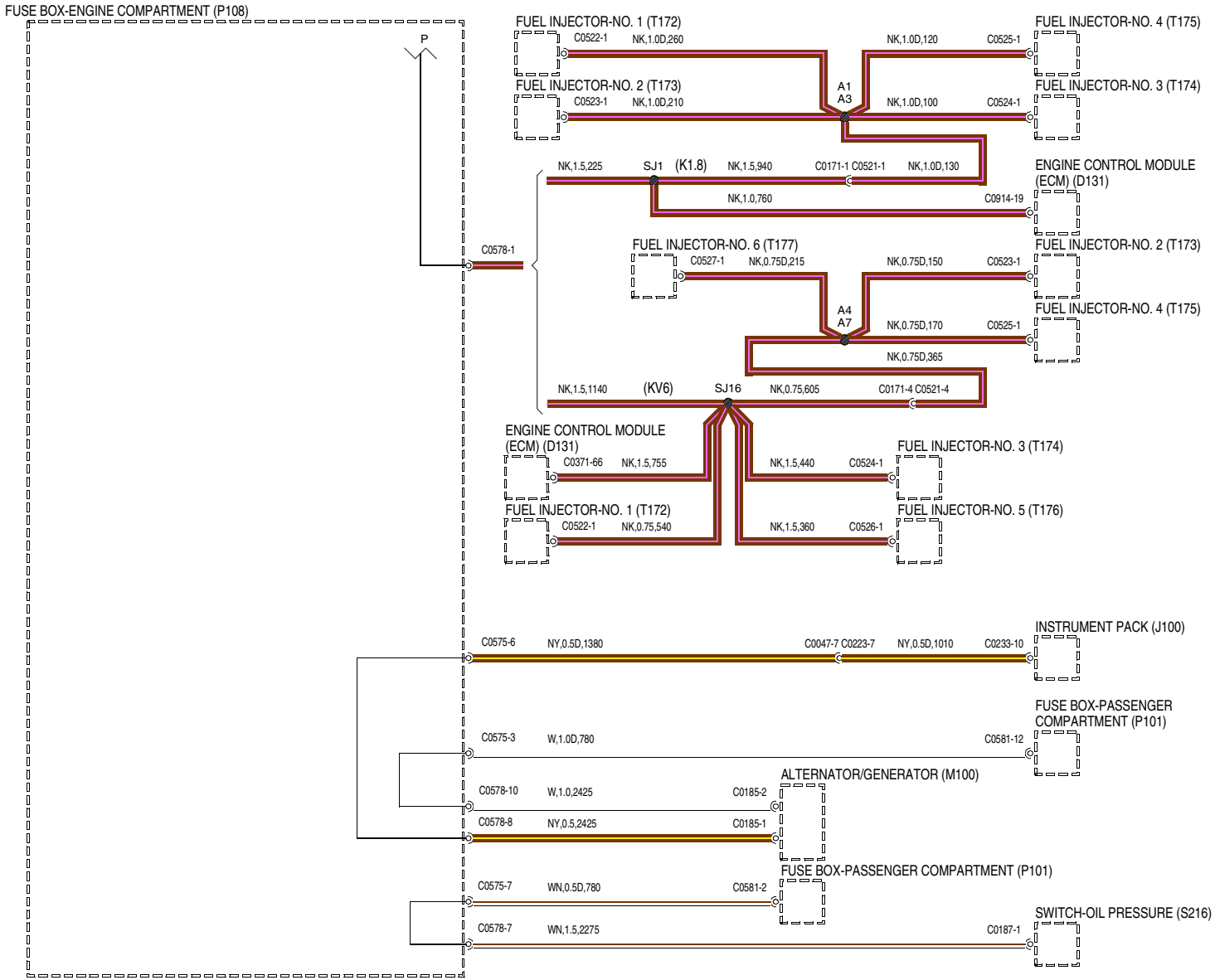

VWR004430-A-05

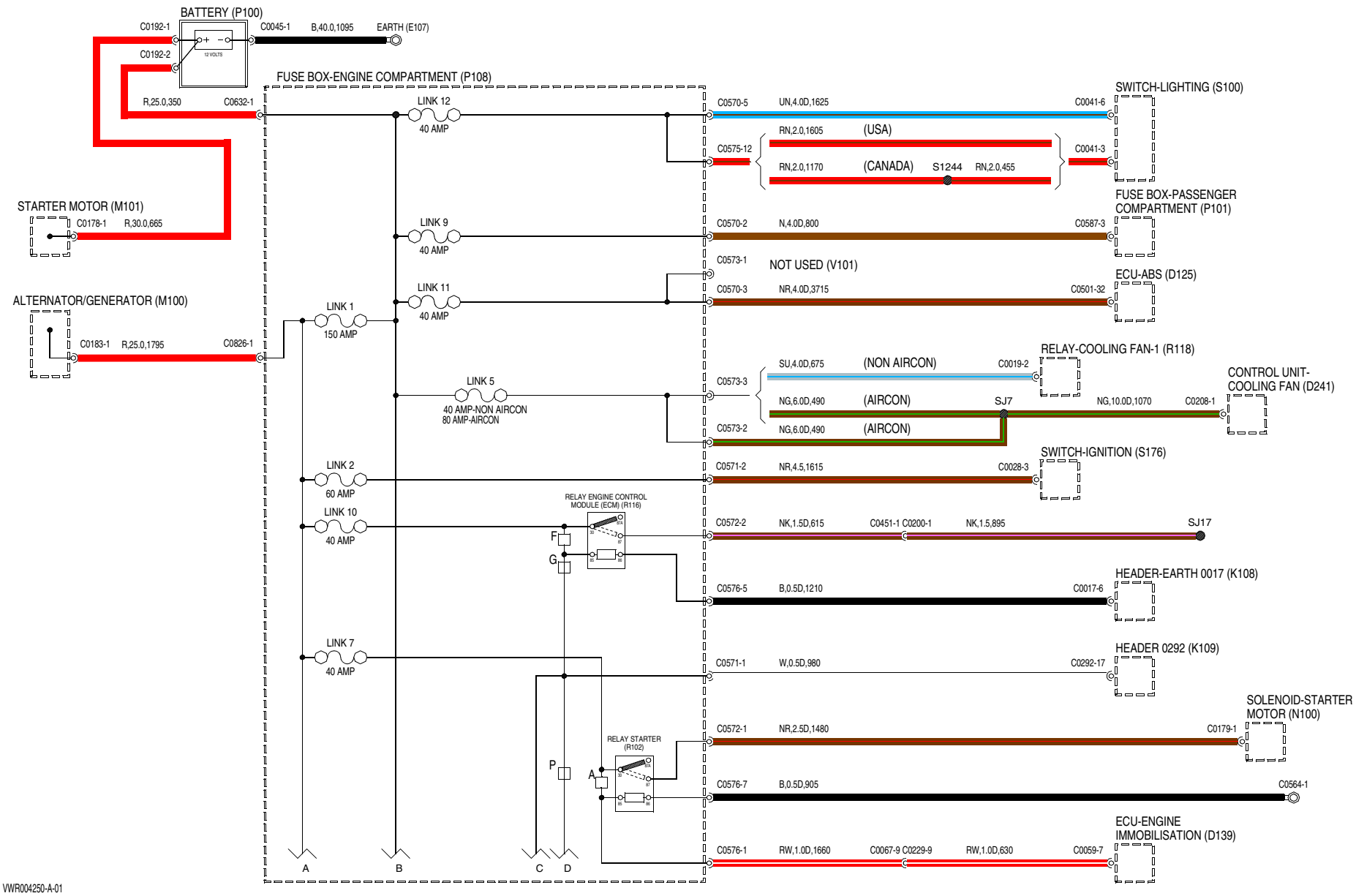
BATTERY (P100)
C0192-1
C0192-2
12 VOLTS
C0045-1
B,40.0,1095
EARTH (E107)
FUSE BOX-ENGINE COMPARTMENT (P108)
R,25.0,350
C0632-1
STARTER MOTOR (M101)
C0178-1
R,30.0,665
ALTERNATOR/GENERATOR (M100)
C0183-1
R,25.0,1795
C0826-1
LINK 12
40 AMP
LINK 9
40 AMP
LINK 11
40 AMP
LINK 1
150 AMP
LINK 5
40 AMP-NON AIRCON
80 AMP-AIRCON
LINK 2
60 AMP
LINK 10
40 AMP
LINK 7
40 AMP
RELAY ENGINE CONTROL MODULE (ECM) (R116)
F
G
RELAY STARTER (R102)
P
A
A
B
C
D
C0570-5
UN,4.0D,1625
C0041-6
SWITCH-LIGHTING (S100)
C0575-12
RN,2.0,1605
(USA)
RN,2.0,1170
(CANADA)
S1244
RN,2.0,455
C0041-3
C0570-2
N,4.0D,800
C0587-3
FUSE BOX-PASSENGER COMPARTMENT (P101)
C0573-1
NOT USED (V101)
C0570-3
NR,4.0D,3715
C0501-32
ECU-ABS (D125)
C0573-3
SU,4.0D,675
(NON AIRCON)
C0019-2
RELAY-COOLING FAN-1 (R118)
NG,6.0D,490
(AIRCON)
SJ7
NG,10.0D,1070
C0208-1
CONTROL UNIT-COOLING FAN (D241)
C0573-2
NG,6.0D,490
(AIRCON)
C0571-2
NR,4.5,1615
C0028-3
SWITCH-IGNITION (S176)
C0572-2
NK,1.5D,615
C0451-1 C0200-1
NK,1.5,895
SJ17
C0576-5
B,0.5D,1210
C0017-6
HEADER-EARTH 0017 (K108)
C0571-1
W,0.5D,980
C0292-17
HEADER 0292 (K109)
C0572-1
NR,2.5D,1480
C0179-1
SOLENOID-STARTER MOTOR (N100)
C0576-7
B,0.5D,905
C0564-1
C0576-1
RW,1.0D,1660
C0067-9 C0229-9
RW,1.0D,630
C0059-7
ECU-ENGINE IMMOBILISATION (D139)
VWR004250-A-01

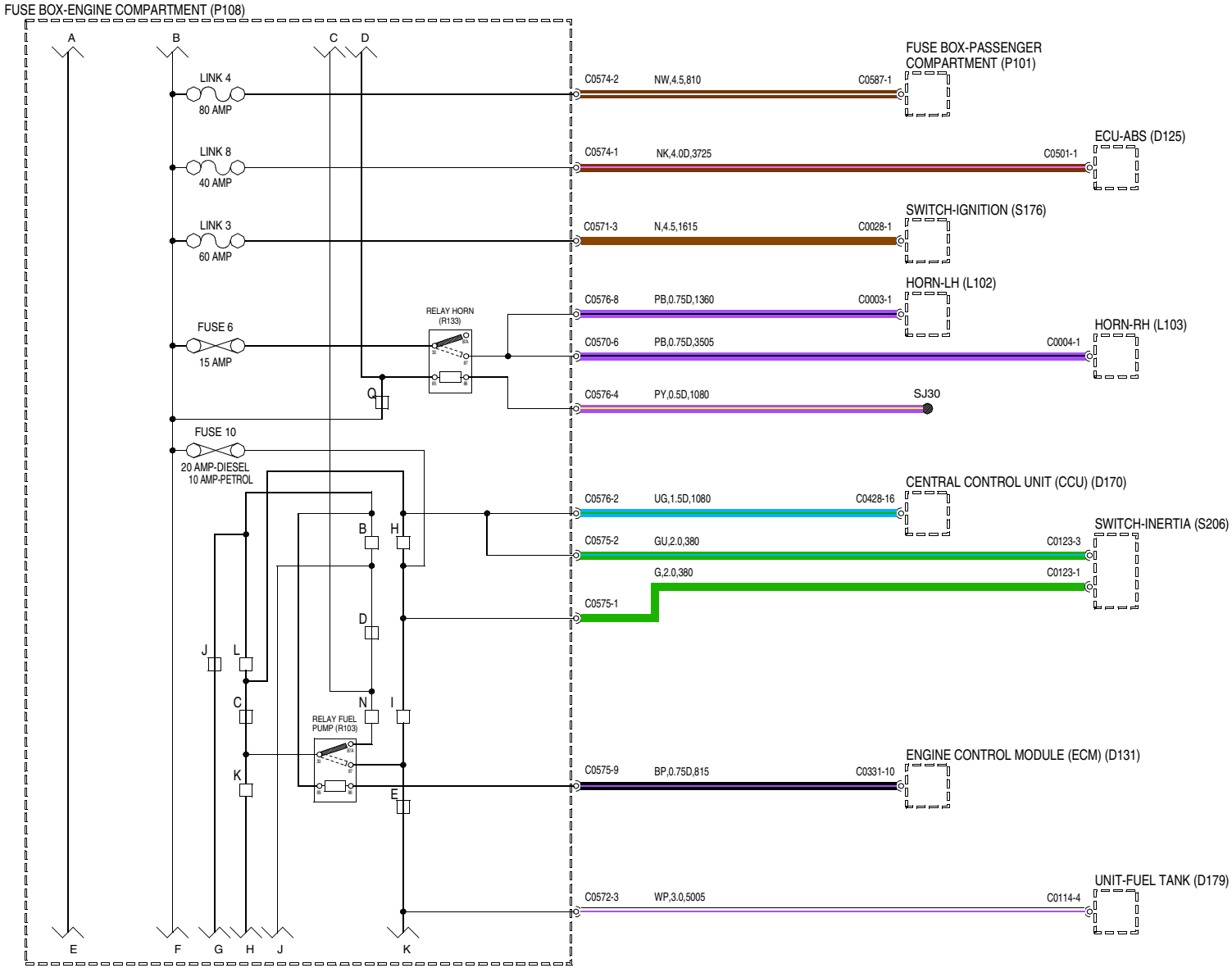

VWR004250-A-02

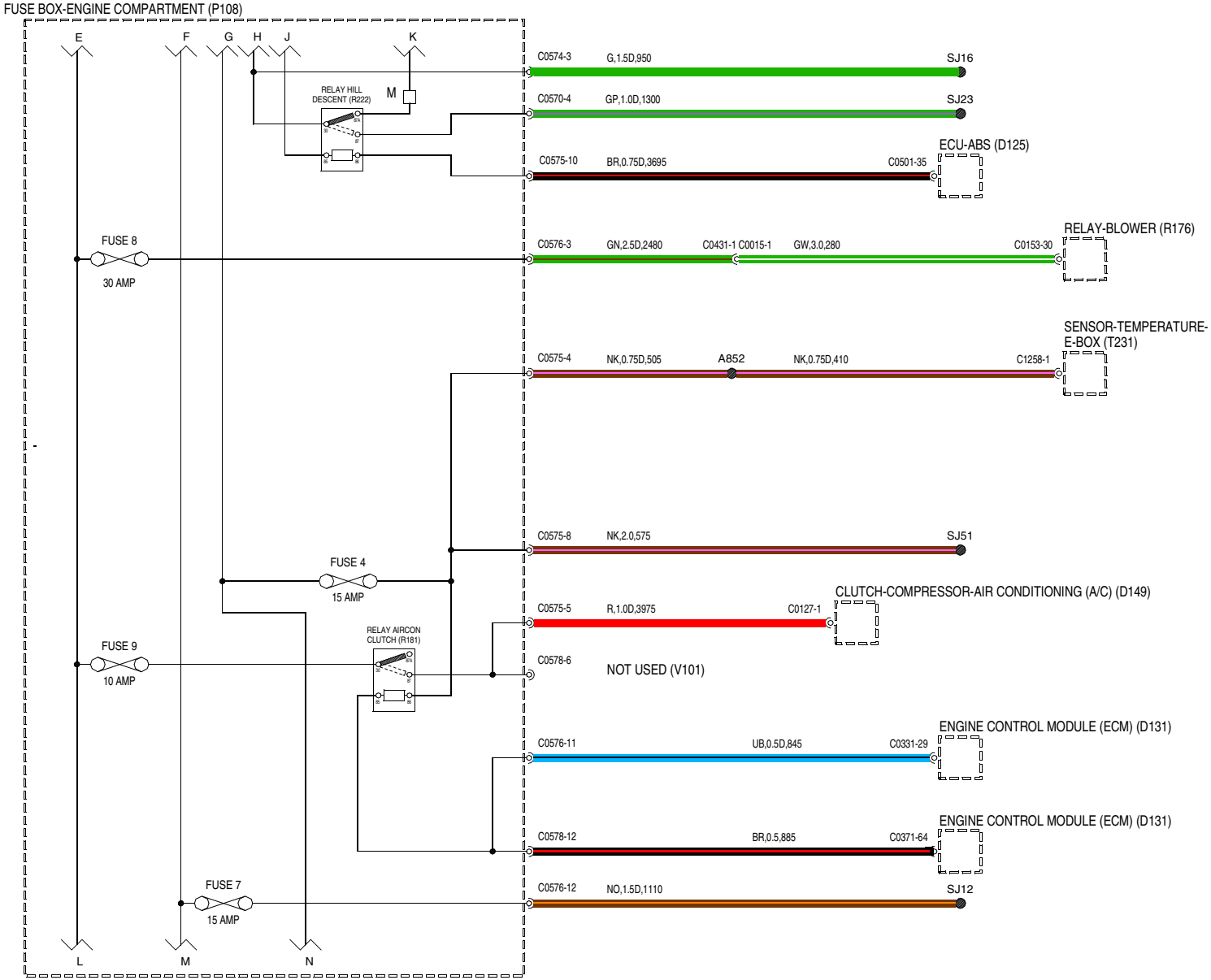

VWR004250-A-03

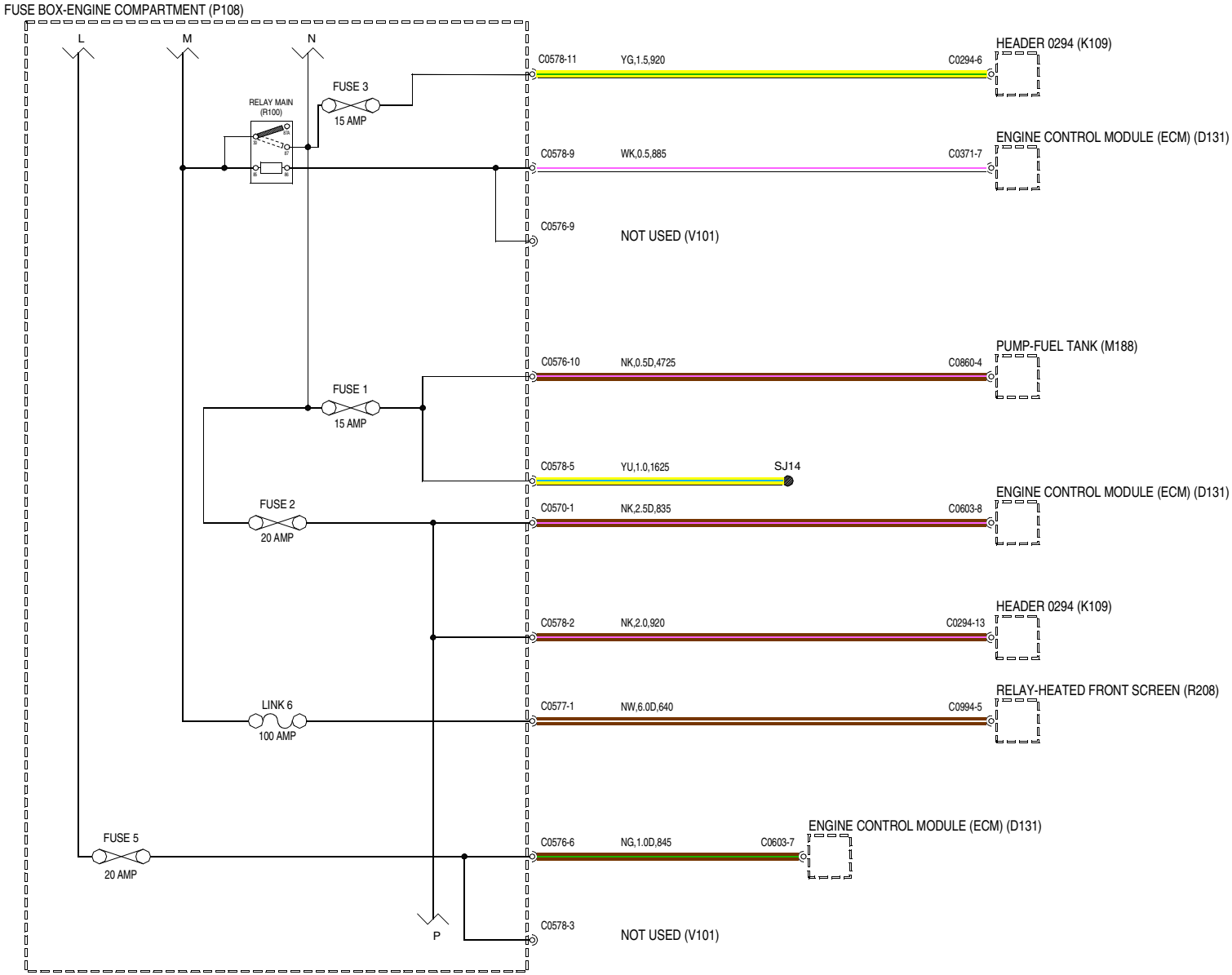

VWR004250-A-04

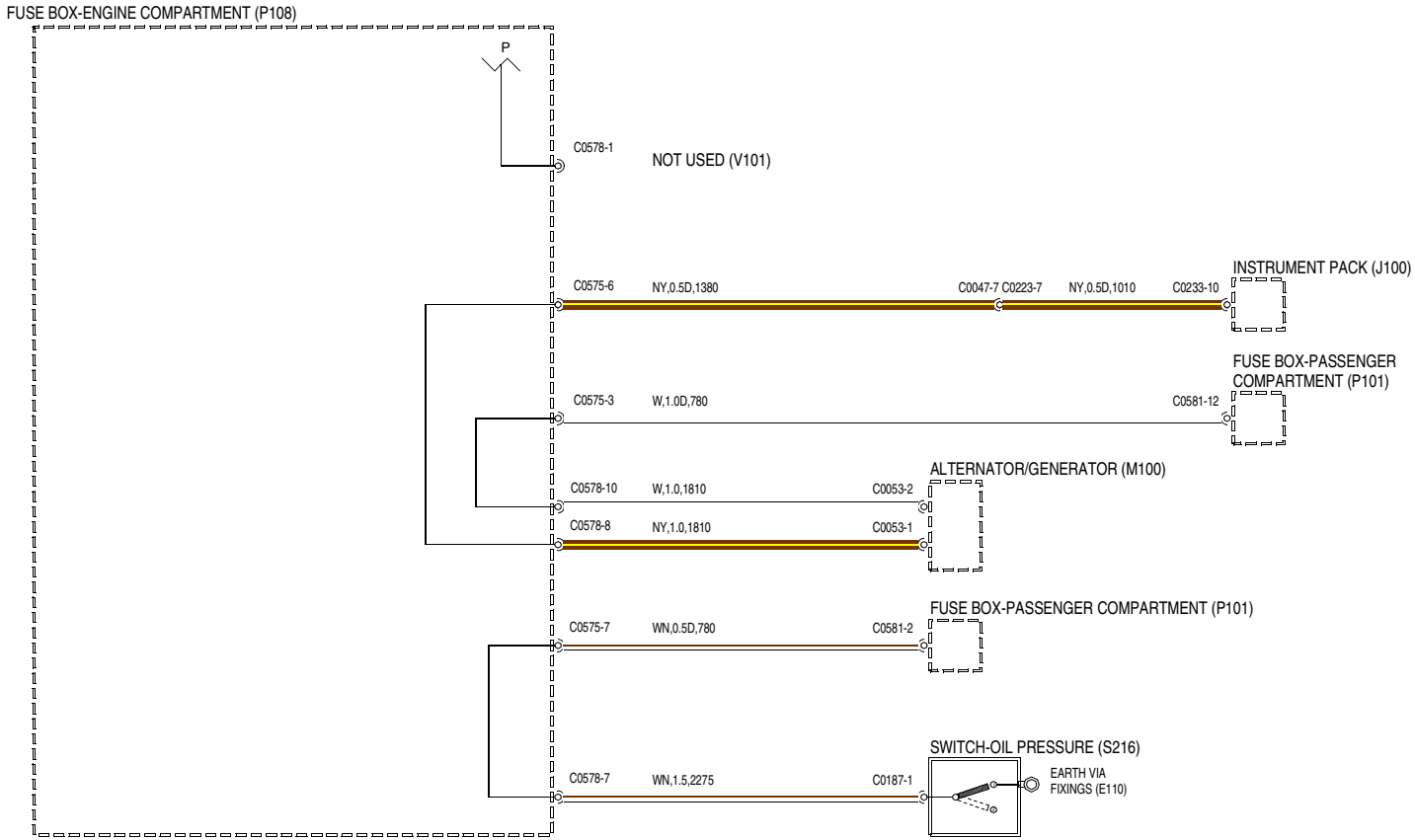

VWR004250-A-05

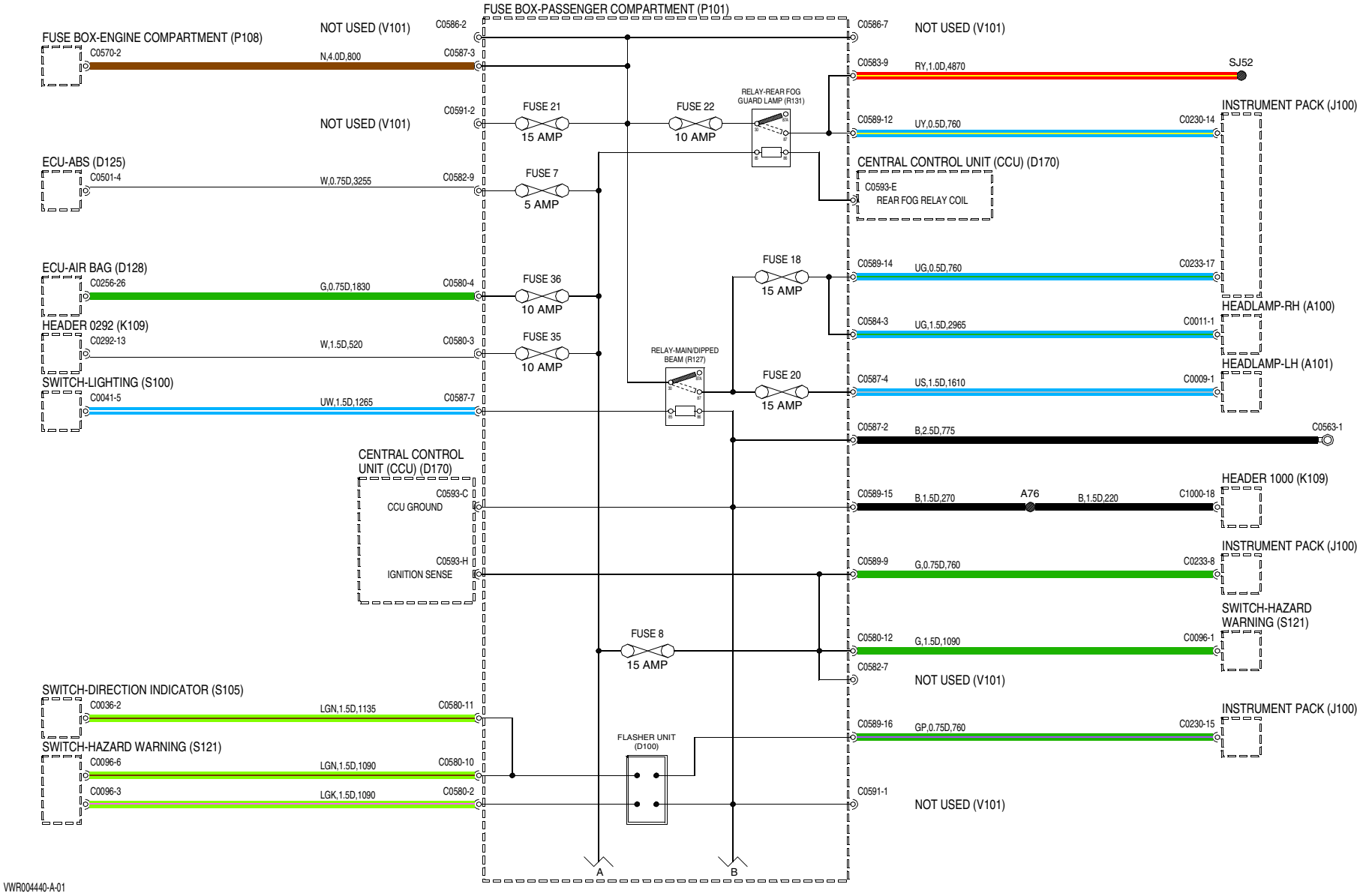
FUSE BOX-PASSENGER COMPARTMENT (P101)
FUSE BOX-ENGINE COMPARTMENT (P108)
C0570-2
N,4.0D,800
C0587-3
NOT USED (V101)
C0586-2
C0586-7
NOT USED (V101)
C0583-9
RY,1.0D,4870
SJ52
C0591-2
NOT USED (V101)
FUSE 21
15 AMP
FUSE 22
10 AMP
RELAY-REAR FOG GUARD LAMP (R131)
C0589-12
UY,0.5D,760
C0230-14
INSTRUMENT PACK (J100)
ECU-ABS (D125)
C0501-4
W,0.75D,3255
C0582-9
FUSE 7
5 AMP
CENTRAL CONTROL UNIT (CCU) (D170)
C0593-E
REAR FOG RELAY COIL
ECU-AIR BAG (D128)
C0256-26
G,0.75D,1830
C0580-4
FUSE 36
10 AMP
FUSE 18
15 AMP
C0589-14
UG,0.5D,760
C0233-17
HEADLAMP-RH (A100)
HEADER 0292 (K109)
C0292-13
W,1.5D,520
C0580-3
FUSE 35
10 AMP
C0584-3
UG,1.5D,2965
C0011-1
RELAY-MAIN/DIPPED BEAM (R127)
HEADLAMP-LH (A101)
SWITCH-LIGHTING (S100)
C0041-5
UW,1.5D,1265
C0587-7
FUSE 20
15 AMP
C0587-4
US,1.5D,1610
C0009-1
C0587-2
B,2.5D,775
C0563-1
CENTRAL CONTROL UNIT (CCU) (D170)
C0593-C
CCU GROUND
C0589-15
B,1.5D,270
A76
B,1.5D,220
C1000-18
HEADER 1000 (K109)
C0593-H
IGNITION SENSE
C0589-9
G,0.75D,760
C0233-8
INSTRUMENT PACK (J100)
SWITCH-HAZARD WARNING (S121)
FUSE 8
15 AMP
C0580-12
G,1.5D,1090
C0096-1
C0582-7
NOT USED (V101)
SWITCH-DIRECTION INDICATOR (S105)
C0036-2
LGN,1.5D,1135
C0580-11
C0589-16
GP,0.75D,760
C0230-15
INSTRUMENT PACK (J100)
FLASHER UNIT (D100)
SWITCH-HAZARD WARNING (S121)
C0096-6
LGN,1.5D,1090
C0580-10
C0096-3
LGK,1.5D,1090
C0580-2
C0591-1
NOT USED (V101)
A
B
VWR004440-A-01

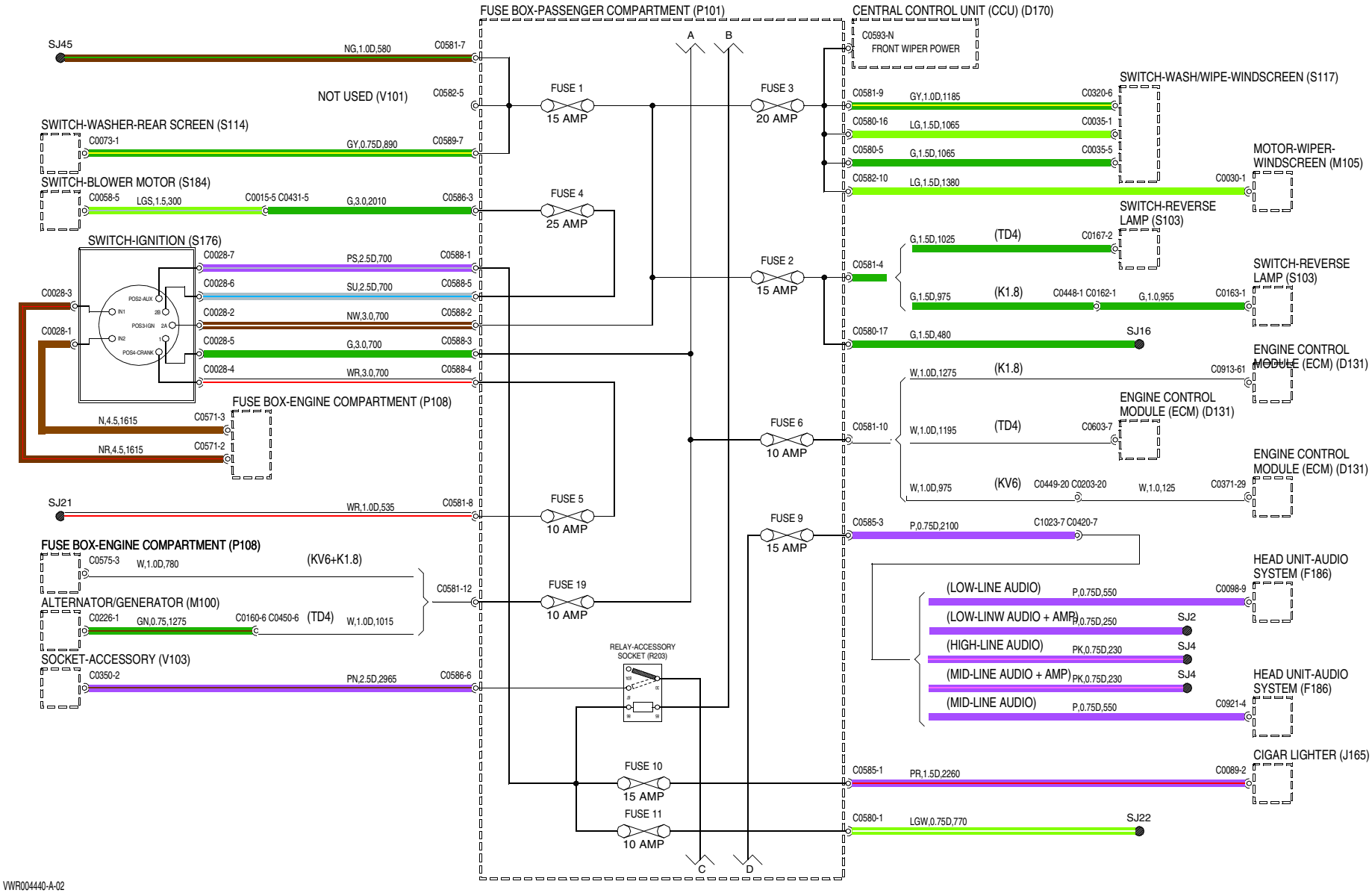
FUSE BOX-PASSENGER COMPARTMENT (P101)
CENTRAL CONTROL UNIT (CCU) (D170)
C0593-N
FRONT WIPER POWER
SJ45
NG,1.0D,580
C0581-7
NOT USED (V101)
C0582-5
FUSE 1
15 AMP
FUSE 3
20 AMP
SWITCH-WASH/WIPE-WINDSCREEN (S117)
C0581-9
GY,1.0D,1185
C0320-6
C0580-16
LG,1.5D,1065
C0035-1
C0580-5
G,1.5D,1065
C0035-5
C0582-10
LG,1.5D,1380
C0030-1
MOTOR-WIPER-WINDSCREEN (M105)
SWITCH-WASHER-REAR SCREEN (S114)
C0073-1
GY,0.75D,890
C0589-7
SWITCH-BLOWER MOTOR (S184)
C0058-5
LGS,1.5,300
C0015-5 C0431-5
G,3.0,2010
C0586-3
FUSE 4
25 AMP
SWITCH-REVERSE LAMP (S103)
G,1.5D,1025
(TD4)
C0167-2
SWITCH-IGNITION (S176)
C0028-7
PS,2.5D,700
C0588-1
FUSE 2
15 AMP
C0581-4
C0028-6
SU,2.5D,700
C0588-5
C0028-3
POS2-AUX
IN1
2B
POS3-IGN
2A
IN2
1
POS4-CRANK
C0028-1
C0028-2
NW,3.0,700
C0588-2
G,1.5D,975
(K1.8)
C0448-1 C0162-1
G,1.0,955
C0163-1
SWITCH-REVERSE LAMP (S103)
C0028-5
G,3.0,700
C0588-3
C0580-17
G,1.5D,480
SJ16
C0028-4
WR,3.0,700
C0588-4
W,1.0D,1275
(K1.8)
C0913-61
ENGINE CONTROL MODULE (ECM) (D131)
FUSE BOX-ENGINE COMPARTMENT (P108)
N,4.5,1615
C0571-3
FUSE 6
10 AMP
C0581-10
W,1.0D,1195
(TD4)
C0603-7
ENGINE CONTROL MODULE (ECM) (D131)
NR,4.5,1615
C0571-2
W,1.0D,975
(KV6)
C0449-20 C0203-20
W,1.0,125
C0371-29
ENGINE CONTROL MODULE (ECM) (D131)
SJ21
WR,1.0D,535
C0581-8
FUSE 5
10 AMP
FUSE 9
15 AMP
C0585-3
P,0.75D,2100
C1023-7 C0420-7
FUSE BOX-ENGINE COMPARTMENT (P108)
C0575-3
W,1.0D,780
(KV6+K1.8)
C0581-12
FUSE 19
10 AMP
HEAD UNIT-AUDIO SYSTEM (F186)
(LOW-LINE AUDIO)
P,0.75D,550
C0098-9
ALTERNATOR/GENERATOR (M100)
C0226-1
GN,0.75,1275
C0160-6 C0450-6
(TD4)
W,1.0D,1015
(LOW-LINW AUDIO + AMP)
P,0.75D,250
SJ2
(HIGH-LINE AUDIO)
PK,0.75D,230
SJ4
RELAY-ACCESSORY SOCKET (R203)
SOCKET-ACCESSORY (V103)
C0350-2
PN,2.5D,2965
C0586-6
(MID-LINE AUDIO + AMP)
PK,0.75D,230
SJ4
HEAD UNIT-AUDIO SYSTEM (F186)
(MID-LINE AUDIO)
P,0.75D,550
C0921-4
CIGAR LIGHTER (J165)
FUSE 10
15 AMP
C0585-1
PR,1.5D,2260
C0089-2
FUSE 11
10 AMP
C0580-1
LGW,0.75D,770
SJ22
A
B
C
D
VWR004440-A-02

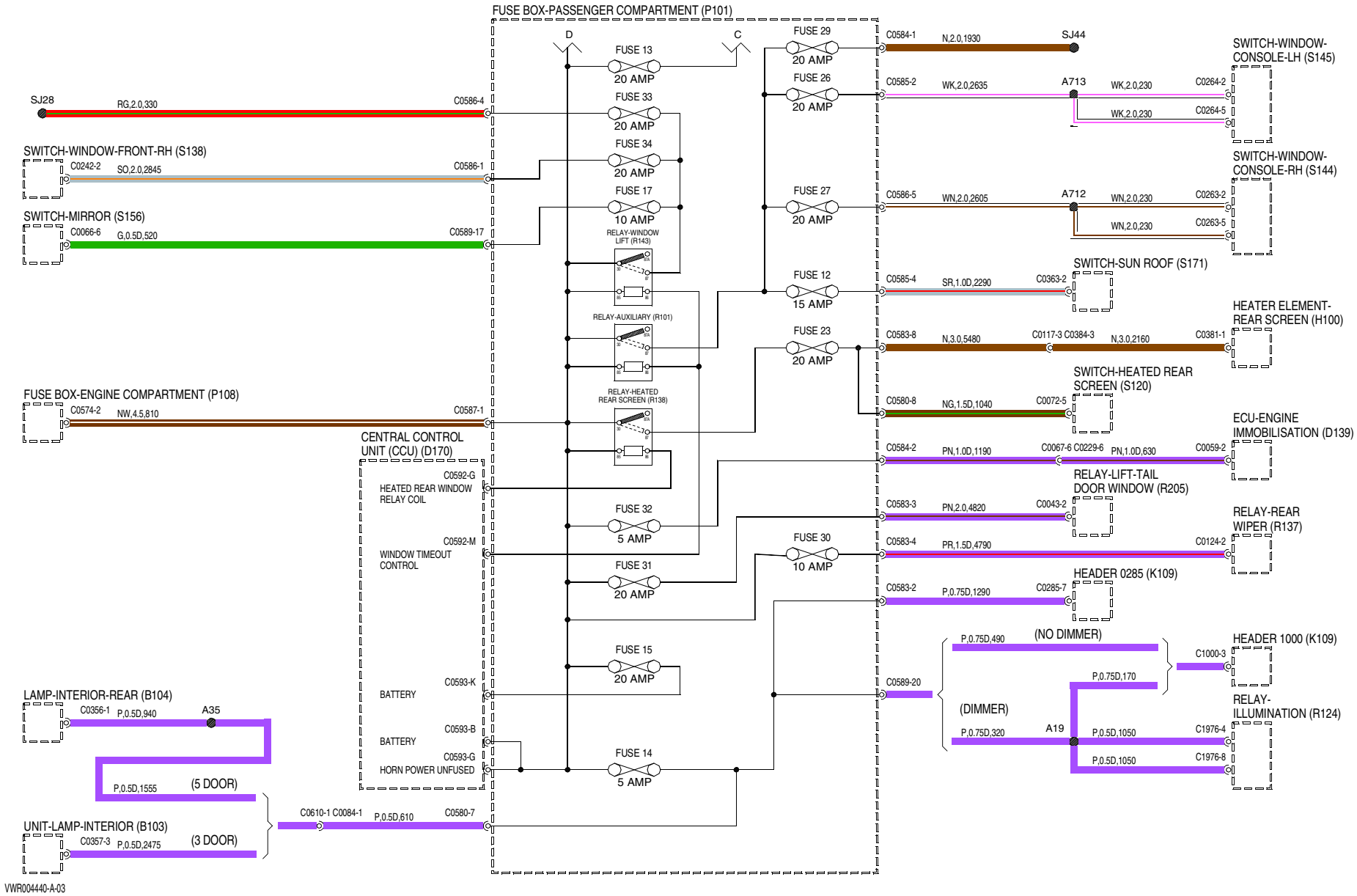
FUSE BOX-PASSENGER COMPARTMENT (P101)
D
C
FUSE 13
20 AMP
FUSE 33
20 AMP
FUSE 34
20 AMP
FUSE 17
10 AMP
RELAY-WINDOW LIFT (R143)
RELAY-AUXILIARY (R101)
RELAY-HEATED REAR SCREEN (R138)
FUSE 32
5 AMP
FUSE 31
20 AMP
FUSE 15
20 AMP
FUSE 14
5 AMP
FUSE 29
20 AMP
FUSE 26
20 AMP
FUSE 27
20 AMP
FUSE 12
15 AMP
FUSE 23
20 AMP
FUSE 30
10 AMP
SJ28
RG,2.0,330
C0586-4
SWITCH-WINDOW-FRONT-RH (S138)
C0242-2
SO,2.0,2845
C0586-1
SWITCH-MIRROR (S156)
C0066-6
G,0.5D,520
C0589-17
FUSE BOX-ENGINE COMPARTMENT (P108)
C0574-2
NW,4.5,810
C0587-1
CENTRAL CONTROL UNIT (CCU) (D170)
C0592-G
HEATED REAR WINDOW RELAY COIL
C0592-M
WINDOW TIMEOUT CONTROL
C0593-K
BATTERY
C0593-B
BATTERY
C0593-G
HORN POWER UNFUSED
LAMP-INTERIOR-REAR (B104)
C0356-1
P,0.5D,940
A35
P,0.5D,1555
(5 DOOR)
UNIT-LAMP-INTERIOR (B103)
C0357-3
P,0.5D,2475
(3 DOOR)
C0610-1 C0084-1
P,0.5D,610
C0580-7
C0584-1
N,2.0,1930
SJ44
SWITCH-WINDOW-CONSOLE-LH (S145)
C0585-2
WK,2.0,2635
A713
WK,2.0,230
C0264-2
WK,2.0,230
C0264-5
SWITCH-WINDOW-CONSOLE-RH (S144)
C0586-5
WN,2.0,2605
A712
WN,2.0,230
C0263-2
WN,2.0,230
C0263-5
SWITCH-SUN ROOF (S171)
C0585-4
SR,1.0D,2290
C0363-2
HEATER ELEMENT-REAR SCREEN (H100)
C0583-8
N,3.0,5480
C0117-3 C0384-3
N,3.0,2160
C0381-1
SWITCH-HEATED REAR SCREEN (S120)
C0580-8
NG,1.5D,1040
C0072-5
ECU-ENGINE IMMOBILISATION (D139)
C0584-2
PN,1.0D,1190
C0067-6 C0229-6
PN,1.0D,630
C0059-2
RELAY-LIFT-TAIL DOOR WINDOW (R205)
C0583-3
PN,2.0,4820
C0043-2
RELAY-REAR WIPER (R137)
C0583-4
PR,1.5D,4790
C0124-2
HEADER 0285 (K109)
C0583-2
P,0.75D,1290
C0285-7
C0589-20
P,0.75D,490
(NO DIMMER)
HEADER 1000 (K109)
C1000-3
P,0.75D,170
(DIMMER)
P,0.75D,320
A19
P,0.5D,1050
C1976-4
P,0.5D,1050
C1976-8
RELAY-ILLUMINATION (R124)
VWR004440-A-03

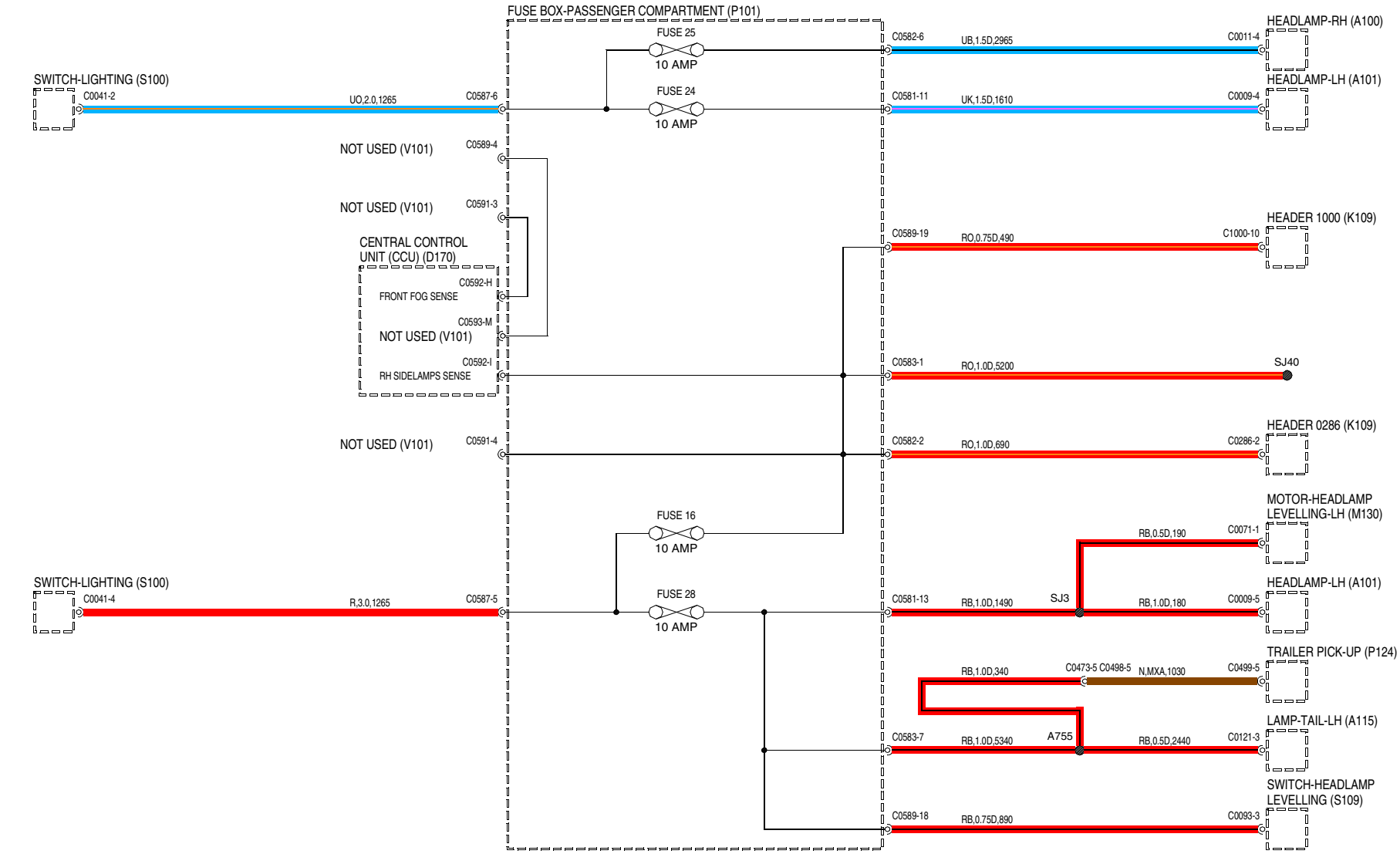
FUSE BOX-PASSENGER COMPARTMENT (P101)
FUSE 25
10 AMP
FUSE 24
10 AMP
FUSE 16
10 AMP
FUSE 28
10 AMP
SWITCH-LIGHTING (S100)
C0041-2
UO,2.0,1265
C0587-6
SWITCH-LIGHTING (S100)
C0041-4
R,3.0,1265
C0587-5
NOT USED (V101)
C0589-4
NOT USED (V101)
C0591-3
CENTRAL CONTROL UNIT (CCU) (D170)
C0592-H
FRONT FOG SENSE
C0593-M
NOT USED (V101)
C0592-I
RH SIDELAMPS SENSE
NOT USED (V101)
C0591-4
C0582-6
UB,1.5D,2965
C0011-4
HEADLAMP-RH (A100)
C0581-11
UK,1.5D,1610
C0009-4
HEADLAMP-LH (A101)
C0589-19
RO,0.75D,490
C1000-10
HEADER 1000 (K109)
C0583-1
RO,1.0D,5200
SJ40
C0582-2
RO,1.0D,690
C0286-2
HEADER 0286 (K109)
RB,0.5D,190
C0071-1
MOTOR-HEADLAMP LEVELLING-LH (M130)
C0581-13
RB,1.0D,1490
SJ3
RB,1.0D,180
C0009-5
HEADLAMP-LH (A101)
RB,1.0D,340
C0473-5 C0498-5
N,MXA,1030
C0499-5
TRAILER PICK-UP (P124)
C0583-7
RB,1.0D,5340
A755
RB,0.5D,2440
C0121-3
LAMP-TAIL-LH (A115)
C0589-18
RB,0.75D,890
C0093-3
SWITCH-HEADLAMP LEVELLING (S109)
VWR004440-A-04

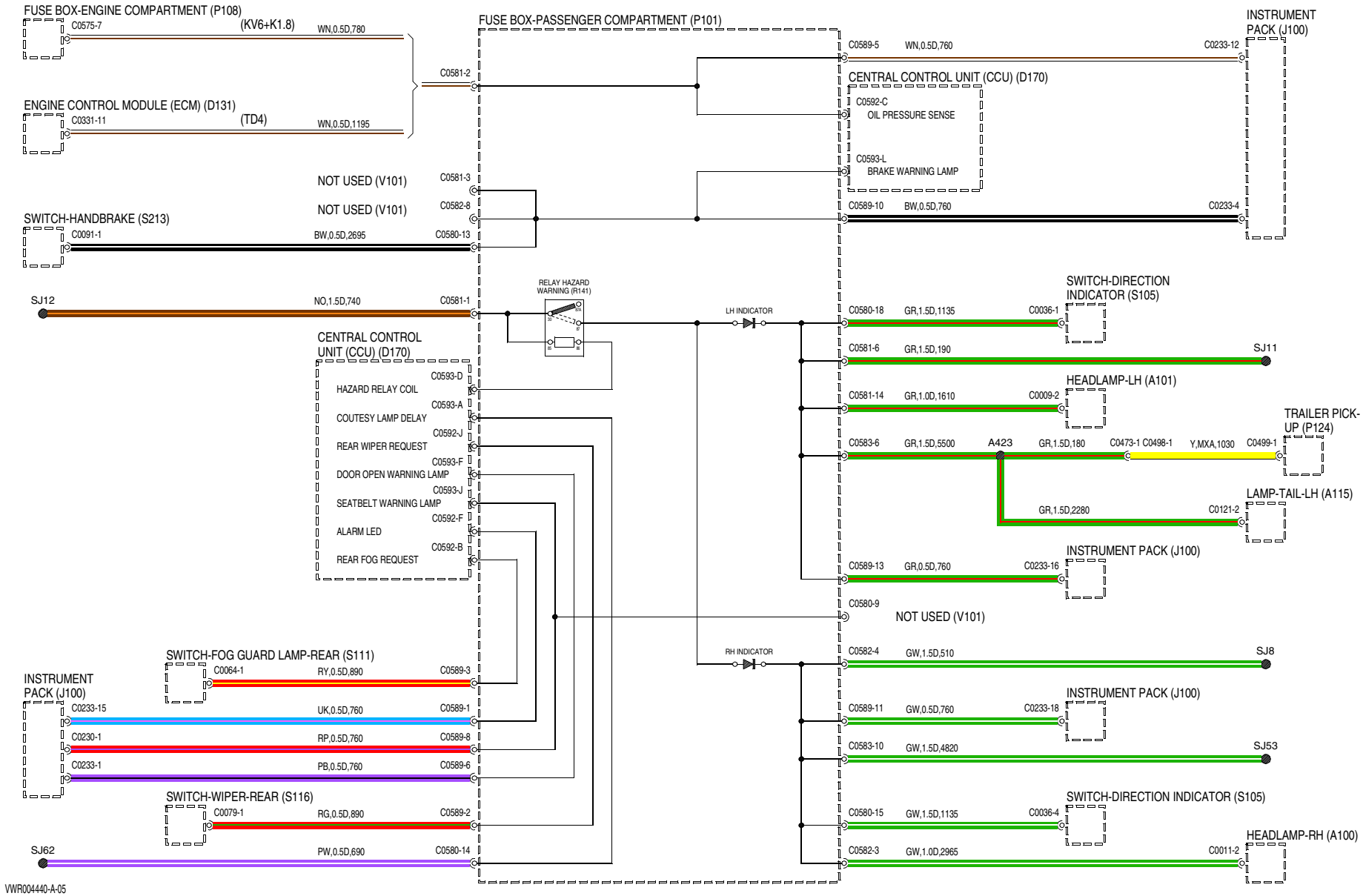
FUSE BOX-ENGINE COMPARTMENT (P108)
C0575-7
(KV6+K1.8)
WN,0.5D,780
ENGINE CONTROL MODULE (ECM) (D131)
C0331-11
(TD4)
WN,0.5D,1195
C0581-2
FUSE BOX-PASSENGER COMPARTMENT (P101)
NOT USED (V101)
C0581-3
NOT USED (V101)
C0582-8
SWITCH-HANDBRAKE (S213)
C0091-1
BW,0.5D,2695
C0580-13
SJ12
NO,1.5D,740
C0581-1
RELAY HAZARD WARNING (R141)
CENTRAL CONTROL UNIT (CCU) (D170)
C0593-D
HAZARD RELAY COIL
C0593-A
COUTESY LAMP DELAY
C0592-J
REAR WIPER REQUEST
C0593-F
DOOR OPEN WARNING LAMP
C0593-J
SEATBELT WARNING LAMP
C0592-F
ALARM LED
C0592-B
REAR FOG REQUEST
SWITCH-FOG GUARD LAMP-REAR (S111)
C0064-1
RY,0.5D,890
C0589-3
INSTRUMENT PACK (J100)
C0233-15
UK,0.5D,760
C0589-1
C0230-1
RP,0.5D,760
C0589-8
C0233-1
PB,0.5D,760
C0589-6
SWITCH-WIPER-REAR (S116)
C0079-1
RG,0.5D,890
C0589-2
SJ62
PW,0.5D,690
C0580-14
LH INDICATOR
RH INDICATOR
C0589-5
WN,0.5D,760
C0233-12
INSTRUMENT PACK (J100)
CENTRAL CONTROL UNIT (CCU) (D170)
C0592-C
OIL PRESSURE SENSE
C0593-L
BRAKE WARNING LAMP
C0589-10
BW,0.5D,760
C0233-4
C0580-18
GR,1.5D,1135
C0036-1
SWITCH-DIRECTION INDICATOR (S105)
C0581-6
GR,1.5D,190
SJ11
C0581-14
GR,1.0D,1610
C0009-2
HEADLAMP-LH (A101)
C0583-6
GR,1.5D,5500
A423
GR,1.5D,180
C0473-1 C0498-1
Y,MXA,1030
C0499-1
TRAILER PICK-UP (P124)
GR,1.5D,2280
C0121-2
LAMP-TAIL-LH (A115)
C0589-13
GR,0.5D,760
C0233-16
INSTRUMENT PACK (J100)
C0580-9
NOT USED (V101)
C0582-4
GW,1.5D,510
SJ8
C0589-11
GW,0.5D,760
C0233-18
INSTRUMENT PACK (J100)
C0583-10
GW,1.5D,4820
SJ53
C0580-15
GW,1.5D,1135
C0036-4
SWITCH-DIRECTION INDICATOR (S105)
C0582-3
GW,1.0D,2965
C0011-2
HEADLAMP-RH (A100)
VWR004440-A-05

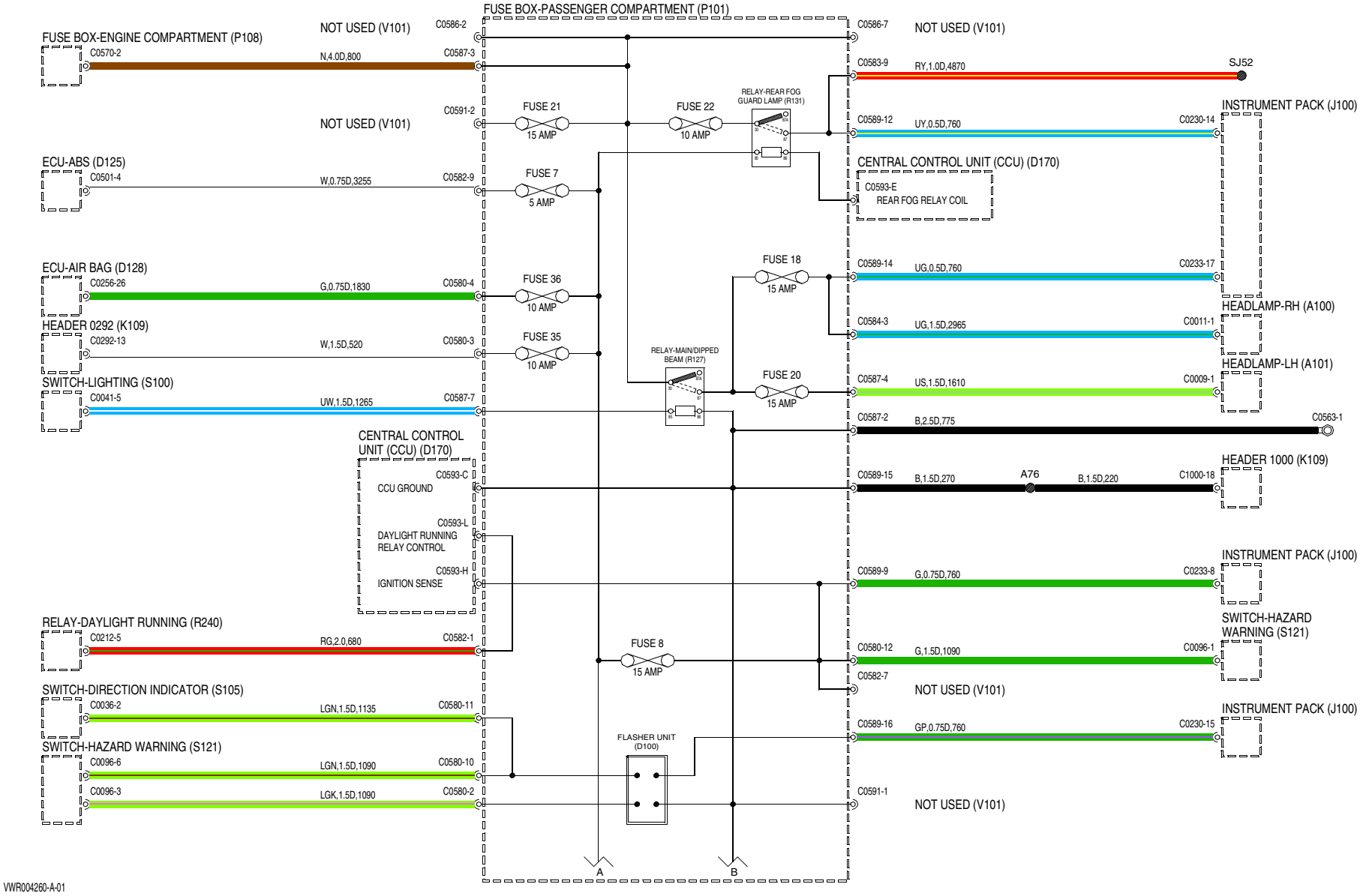
FUSE BOX-PASSENGER COMPARTMENT (P101)
FUSE BOX-ENGINE COMPARTMENT (P108)
C0570-2
N,4.0D,800
C0587-3
NOT USED (V101)
C0586-2
C0586-7
NOT USED (V101)
C0583-9
RY,1.0D,4870
SJ52
C0591-2
NOT USED (V101)
FUSE 21
15 AMP
FUSE 22
10 AMP
RELAY-REAR FOG GUARD LAMP (R131)
C0589-12
UY,0.5D,760
C0230-14
INSTRUMENT PACK (J100)
ECU-ABS (D125)
C0501-4
W,0.75D,3255
C0582-9
FUSE 7
5 AMP
CENTRAL CONTROL UNIT (CCU) (D170)
C0593-E
REAR FOG RELAY COIL
ECU-AIR BAG (D128)
C0256-26
G,0.75D,1830
C0580-4
FUSE 36
10 AMP
FUSE 18
15 AMP
C0589-14
UG,0.5D,760
C0233-17
HEADLAMP-RH (A100)
HEADER 0292 (K109)
C0292-13
W,1.5D,520
C0580-3
FUSE 35
10 AMP
C0584-3
UG,1.5D,2965
C0011-1
RELAY-MAIN/DIPPED BEAM (R127)
HEADLAMP-LH (A101)
SWITCH-LIGHTING (S100)
C0041-5
UW,1.5D,1265
C0587-7
FUSE 20
15 AMP
C0587-4
US,1.5D,1610
C0009-1
C0587-2
B,2.5D,775
C0563-1
CENTRAL CONTROL UNIT (CCU) (D170)
C0593-C
CCU GROUND
C0589-15
B,1.5D,270
A76
B,1.5D,220
C1000-18
HEADER 1000 (K109)
C0593-L
DAYLIGHT RUNNING RELAY CONTROL
C0593-H
IGNITION SENSE
C0589-9
G,0.75D,760
C0233-8
INSTRUMENT PACK (J100)
RELAY-DAYLIGHT RUNNING (R240)
C0212-5
RG,2.0,680
C0582-1
FUSE 8
15 AMP
C0580-12
G,1.5D,1090
C0096-1
SWITCH-HAZARD WARNING (S121)
C0582-7
NOT USED (V101)
SWITCH-DIRECTION INDICATOR (S105)
C0036-2
LGN,1.5D,1135
C0580-11
C0589-16
GP,0.75D,760
C0230-15
INSTRUMENT PACK (J100)
FLASHER UNIT (D100)
SWITCH-HAZARD WARNING (S121)
C0096-6
LGN,1.5D,1090
C0580-10
C0096-3
LGK,1.5D,1090
C0580-2
C0591-1
NOT USED (V101)
A
B
VWR004260-A-01

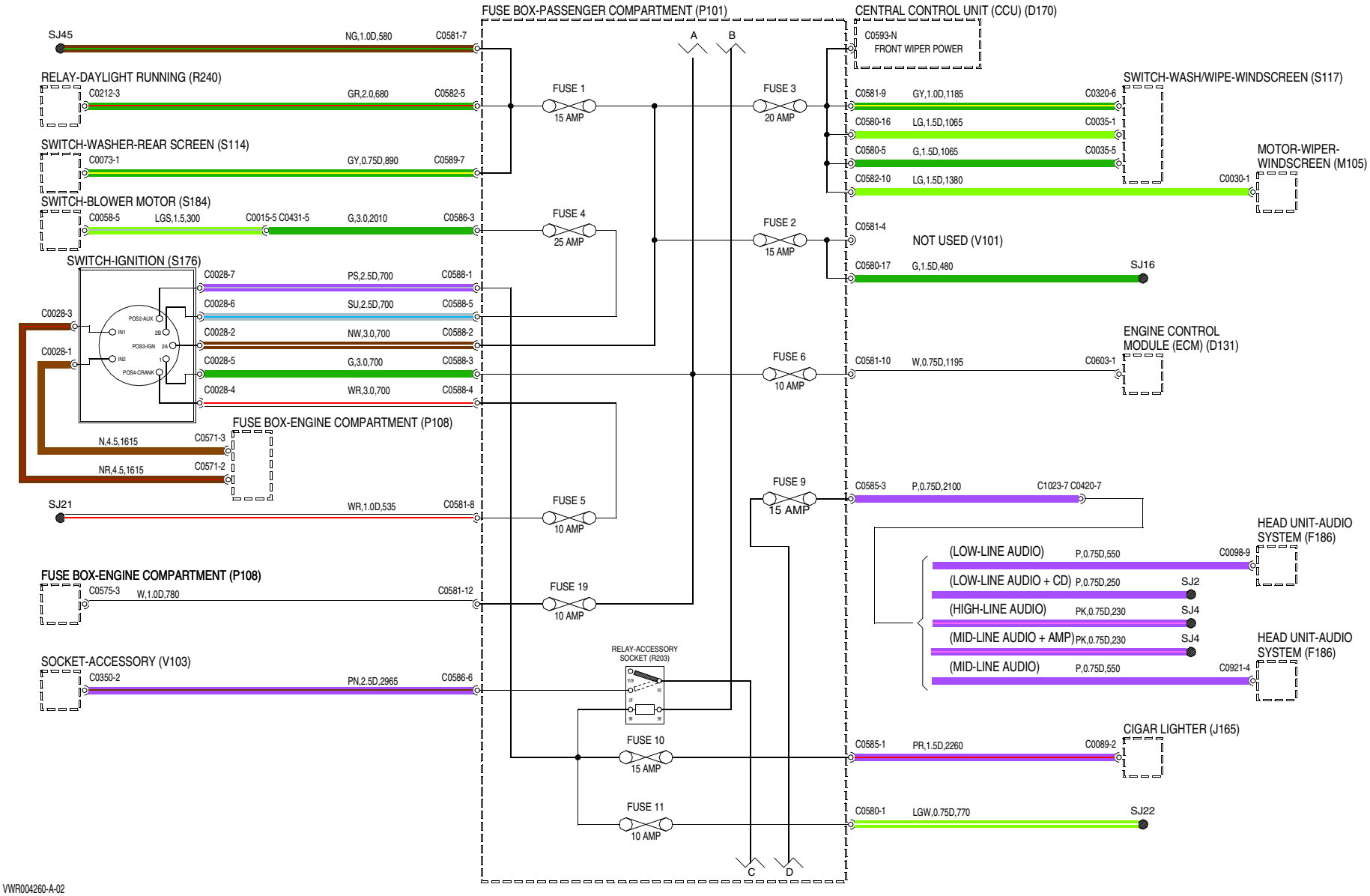
FUSE BOX-PASSENGER COMPARTMENT (P101)
CENTRAL CONTROL UNIT (CCU) (D170)
C0593-N
FRONT WIPER POWER
SJ45
NG,1.0D,580
C0581-7
RELAY-DAYLIGHT RUNNING (R240)
C0212-3
GR,2.0,680
C0582-5
FUSE 1
15 AMP
FUSE 3
20 AMP
SWITCH-WASH/WIPE-WINDSCREEN (S117)
C0581-9
GY,1.0D,1185
C0320-6
C0580-16
LG,1.5D,1065
C0035-1
C0580-5
G,1.5D,1065
C0035-5
C0582-10
LG,1.5D,1380
C0030-1
MOTOR-WIPER-WINDSCREEN (M105)
SWITCH-WASHER-REAR SCREEN (S114)
C0073-1
GY,0.75D,890
C0589-7
SWITCH-BLOWER MOTOR (S184)
C0058-5
LGS,1.5,300
C0015-5 C0431-5
G,3.0,2010
C0586-3
FUSE 4
25 AMP
FUSE 2
15 AMP
C0581-4
NOT USED (V101)
C0580-17
G,1.5D,480
SJ16
SWITCH-IGNITION (S176)
C0028-7
PS,2.5D,700
C0588-1
C0028-6
SU,2.5D,700
C0588-5
C0028-2
NW,3.0,700
C0588-2
C0028-5
G,3.0,700
C0588-3
C0028-4
WR,3.0,700
C0588-4
C0028-3
C0028-1
POS2-AUX
IN1
2B
POS3-IGN
2A
IN2
1
POS4-CRANK
ENGINE CONTROL MODULE (ECM) (D131)
FUSE 6
10 AMP
C0581-10
W,0.75D,1195
C0603-1
FUSE BOX-ENGINE COMPARTMENT (P108)
N,4.5,1615
C0571-3
NR,4.5,1615
C0571-2
FUSE 9
15 AMP
C0585-3
P,0.75D,2100
C1023-7 C0420-7
SJ21
WR,1.0D,535
C0581-8
FUSE 5
10 AMP
HEAD UNIT-AUDIO SYSTEM (F186)
(LOW-LINE AUDIO)
P,0.75D,550
C0098-9
(LOW-LINE AUDIO + CD)
P,0.75D,250
SJ2
(HIGH-LINE AUDIO)
PK,0.75D,230
SJ4
(MID-LINE AUDIO + AMP)
PK,0.75D,230
SJ4
(MID-LINE AUDIO)
P,0.75D,550
C0921-4
HEAD UNIT-AUDIO SYSTEM (F186)
FUSE BOX-ENGINE COMPARTMENT (P108)
C0575-3
W,1.0D,780
C0581-12
FUSE 19
10 AMP
SOCKET-ACCESSORY (V103)
C0350-2
PN,2.5D,2965
C0586-6
RELAY-ACCESSORY SOCKET (R203)
FUSE 10
15 AMP
CIGAR LIGHTER (J165)
C0585-1
PR,1.5D,2260
C0089-2
FUSE 11
10 AMP
C0580-1
LGW,0.75D,770
SJ22
A
B
C
D
VWR004260-A-02

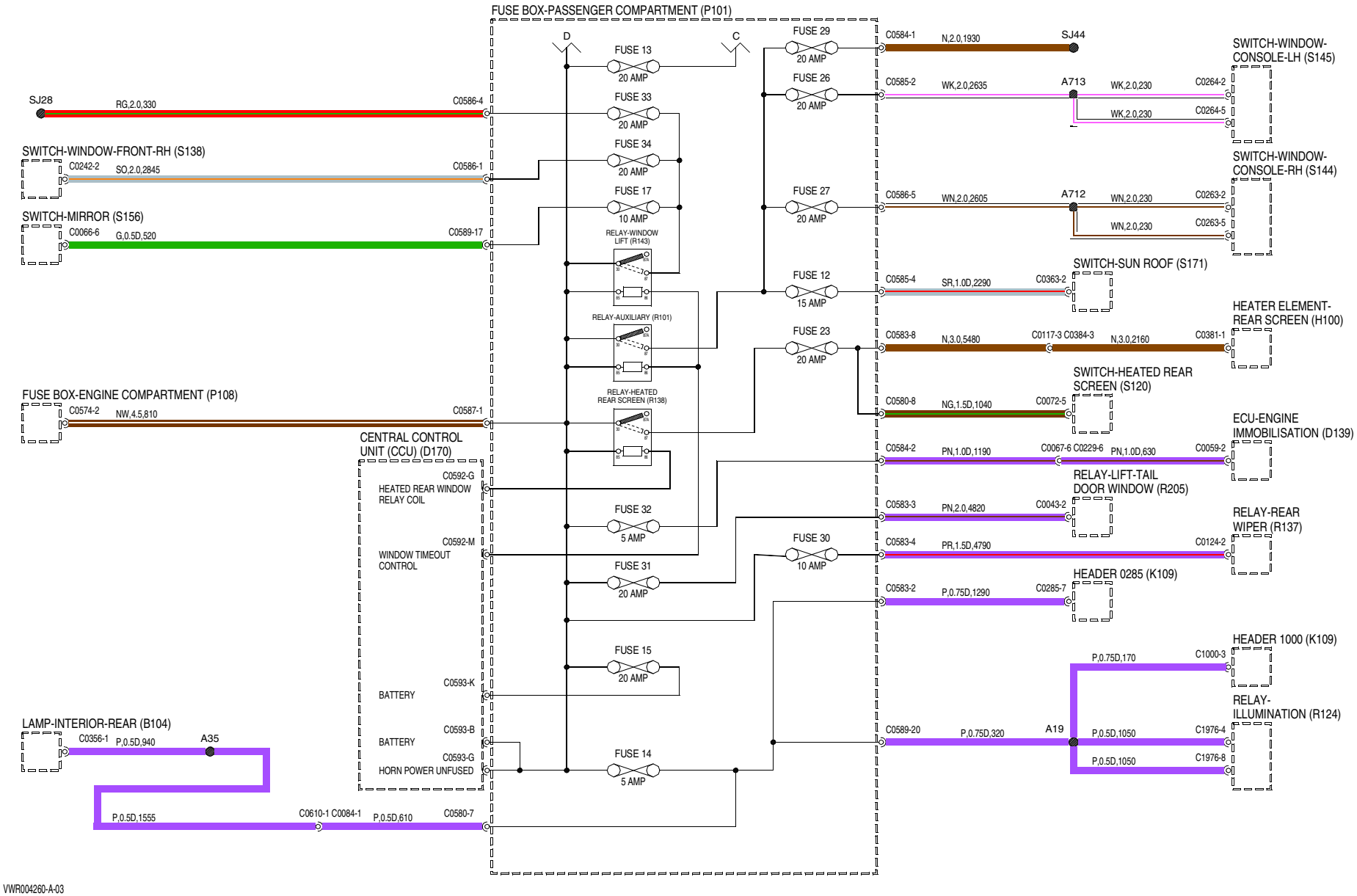
FUSE BOX-PASSENGER COMPARTMENT (P101)
D
C
FUSE 13
20 AMP
FUSE 33
20 AMP
FUSE 34
20 AMP
FUSE 17
10 AMP
RELAY-WINDOW LIFT (R143)
RELAY-AUXILIARY (R101)
RELAY-HEATED REAR SCREEN (R138)
FUSE 32
5 AMP
FUSE 31
20 AMP
FUSE 15
20 AMP
FUSE 14
5 AMP
FUSE 29
20 AMP
FUSE 26
20 AMP
FUSE 27
20 AMP
FUSE 12
15 AMP
FUSE 23
20 AMP
FUSE 30
10 AMP
SJ28
RG,2.0,330
C0586-4
SWITCH-WINDOW-FRONT-RH (S138)
C0242-2
SO,2.0,2845
C0586-1
SWITCH-MIRROR (S156)
C0066-6
G,0.5D,520
C0589-17
FUSE BOX-ENGINE COMPARTMENT (P108)
C0574-2
NW,4.5,810
C0587-1
CENTRAL CONTROL UNIT (CCU) (D170)
C0592-G
HEATED REAR WINDOW RELAY COIL
C0592-M
WINDOW TIMEOUT CONTROL
C0593-K
BATTERY
C0593-B
BATTERY
C0593-G
HORN POWER UNFUSED
LAMP-INTERIOR-REAR (B104)
C0356-1
P,0.5D,940
A35
P,0.5D,1555
C0610-1 C0084-1
P,0.5D,610
C0580-7
C0584-1
N,2.0,1930
SJ44
SWITCH-WINDOW-CONSOLE-LH (S145)
C0585-2
WK,2.0,2635
A713
WK,2.0,230
C0264-2
WK,2.0,230
C0264-5
SWITCH-WINDOW-CONSOLE-RH (S144)
C0586-5
WN,2.0,2605
A712
WN,2.0,230
C0263-2
WN,2.0,230
C0263-5
SWITCH-SUN ROOF (S171)
C0585-4
SR,1.0D,2290
C0363-2
HEATER ELEMENT-REAR SCREEN (H100)
C0583-8
N,3.0,5480
C0117-3 C0384-3
N,3.0,2160
C0381-1
SWITCH-HEATED REAR SCREEN (S120)
C0580-8
NG,1.5D,1040
C0072-5
ECU-ENGINE IMMOBILISATION (D139)
C0584-2
PN,1.0D,1190
C0067-6 C0229-6
PN,1.0D,630
C0059-2
RELAY-LIFT-TAIL DOOR WINDOW (R205)
C0583-3
PN,2.0,4820
C0043-2
RELAY-REAR WIPER (R137)
C0583-4
PR,1.5D,4790
C0124-2
HEADER 0285 (K109)
C0583-2
P,0.75D,1290
C0285-7
HEADER 1000 (K109)
P,0.75D,170
C1000-3
RELAY-ILLUMINATION (R124)
C0589-20
P,0.75D,320
A19
P,0.5D,1050
C1976-4
P,0.5D,1050
C1976-8
VWR004260-A-03

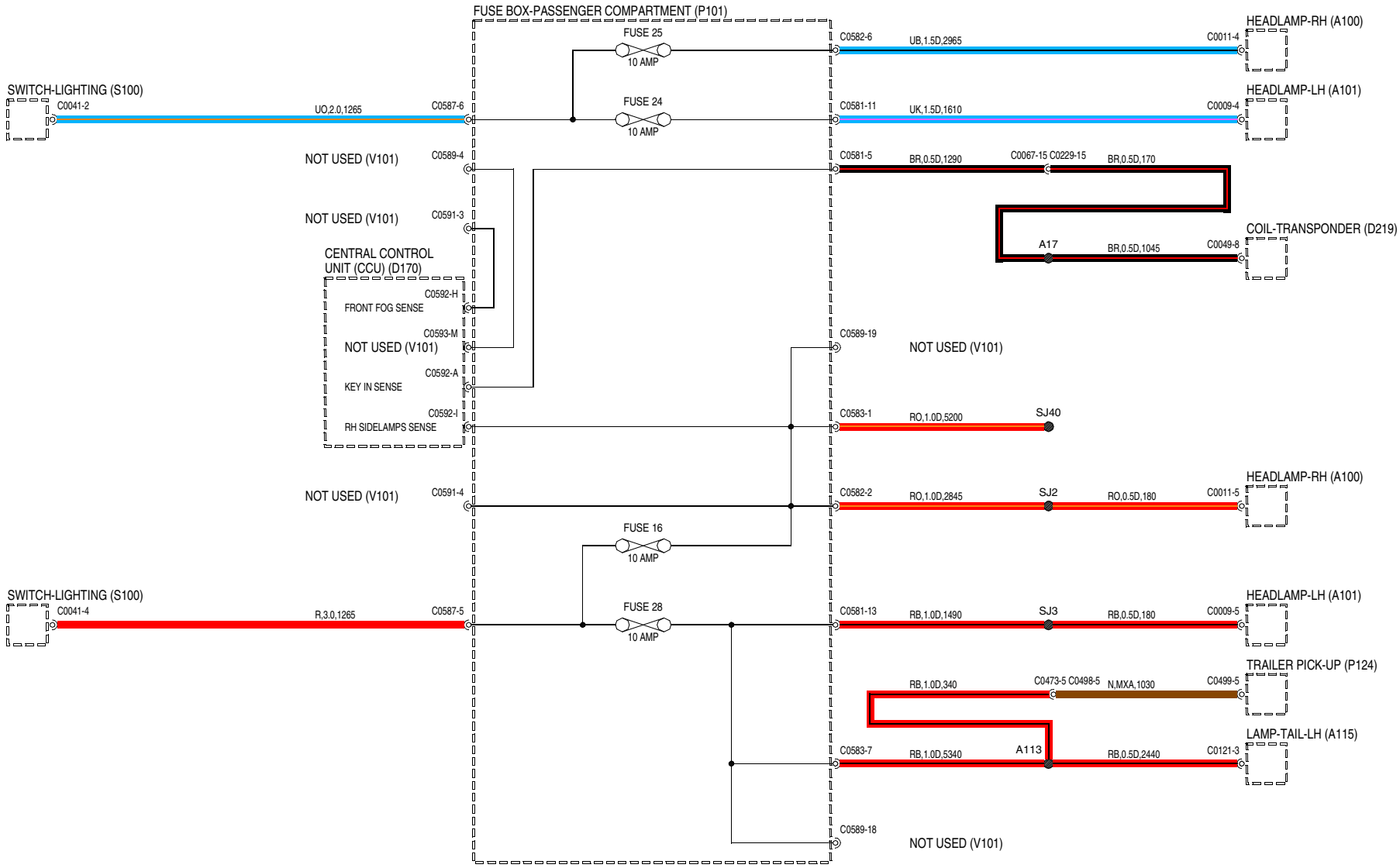

VWR004260-A-04

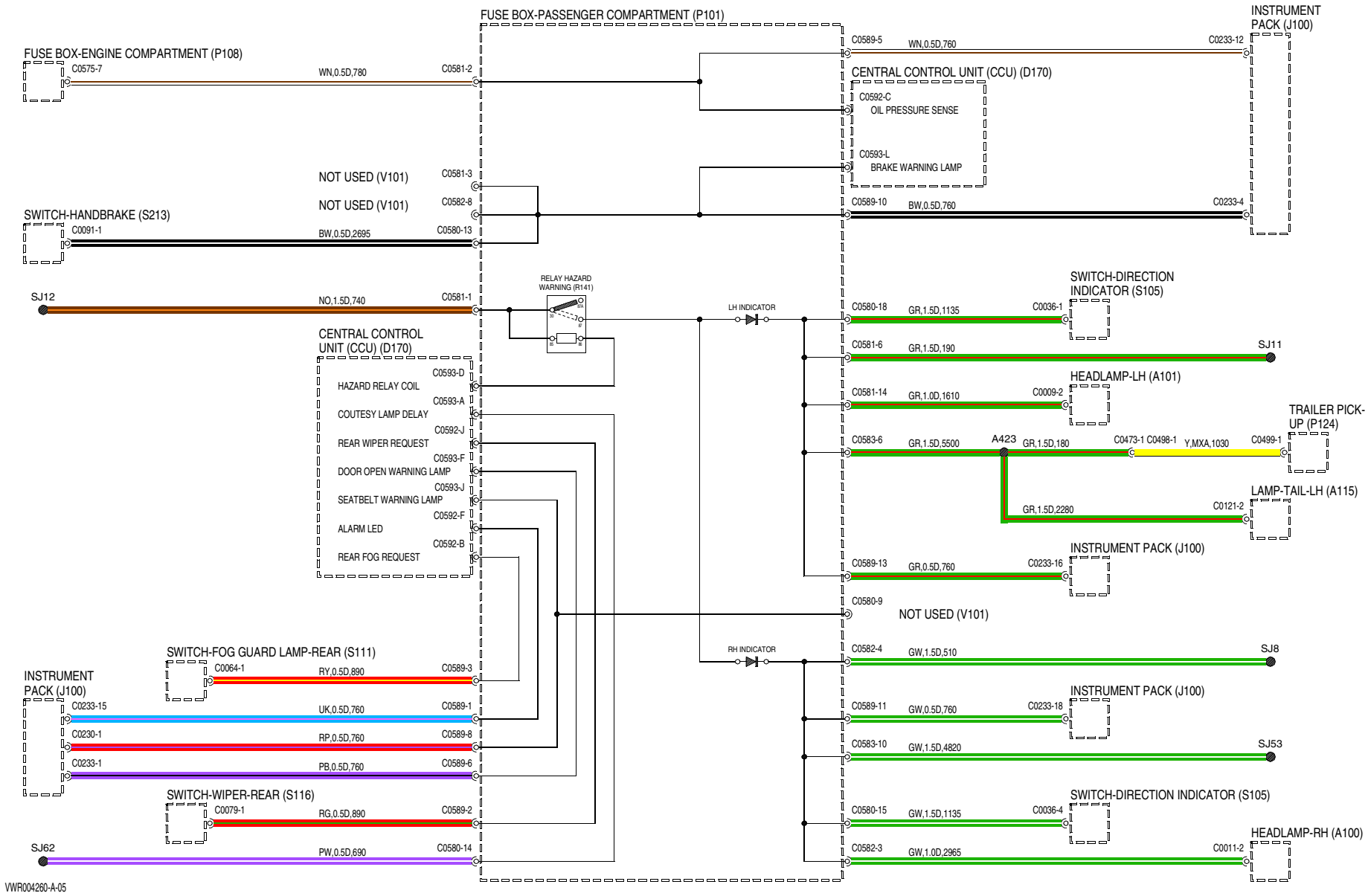
FUSE BOX-PASSENGER COMPARTMENT (P101)
FUSE BOX-ENGINE COMPARTMENT (P108)
C0575-7
WN,0.5D,780
C0581-2
NOT USED (V101)
C0581-3
NOT USED (V101)
C0582-8
SWITCH-HANDBRAKE (S213)
C0091-1
BW,0.5D,2695
C0580-13
SJ12
NO,1.5D,740
C0581-1
RELAY HAZARD WARNING (R141)
CENTRAL CONTROL UNIT (CCU) (D170)
C0593-D
HAZARD RELAY COIL
C0593-A
COUTESY LAMP DELAY
C0592-J
REAR WIPER REQUEST
C0593-F
DOOR OPEN WARNING LAMP
C0593-J
SEATBELT WARNING LAMP
C0592-F
ALARM LED
C0592-B
REAR FOG REQUEST
SWITCH-FOG GUARD LAMP-REAR (S111)
C0064-1
RY,0.5D,890
C0589-3
INSTRUMENT PACK (J100)
C0233-15
UK,0.5D,760
C0589-1
C0230-1
RP,0.5D,760
C0589-8
C0233-1
PB,0.5D,760
C0589-6
SWITCH-WIPER-REAR (S116)
C0079-1
RG,0.5D,890
C0589-2
SJ62
PW,0.5D,690
C0580-14
LH INDICATOR
RH INDICATOR
C0589-5
WN,0.5D,760
C0233-12
INSTRUMENT PACK (J100)
CENTRAL CONTROL UNIT (CCU) (D170)
C0592-C
OIL PRESSURE SENSE
C0593-L
BRAKE WARNING LAMP
C0589-10
BW,0.5D,760
C0233-4
C0580-18
GR,1.5D,1135
C0036-1
SWITCH-DIRECTION INDICATOR (S105)
C0581-6
GR,1.5D,190
SJ11
C0581-14
GR,1.0D,1610
C0009-2
HEADLAMP-LH (A101)
C0583-6
GR,1.5D,5500
A423
GR,1.5D,180
C0473-1 C0498-1
Y,MXA,1030
C0499-1
TRAILER PICK-UP (P124)
GR,1.5D,2280
C0121-2
LAMP-TAIL-LH (A115)
C0589-13
GR,0.5D,760
C0233-16
INSTRUMENT PACK (J100)
C0580-9
NOT USED (V101)
C0582-4
GW,1.5D,510
SJ8
C0589-11
GW,0.5D,760
C0233-18
INSTRUMENT PACK (J100)
C0583-10
GW,1.5D,4820
SJ53
C0580-15
GW,1.5D,1135
C0036-4
SWITCH-DIRECTION INDICATOR (S105)
C0582-3
GW,1.0D,2965
C0011-2
HEADLAMP-RH (A100)
VWR004260-A-05

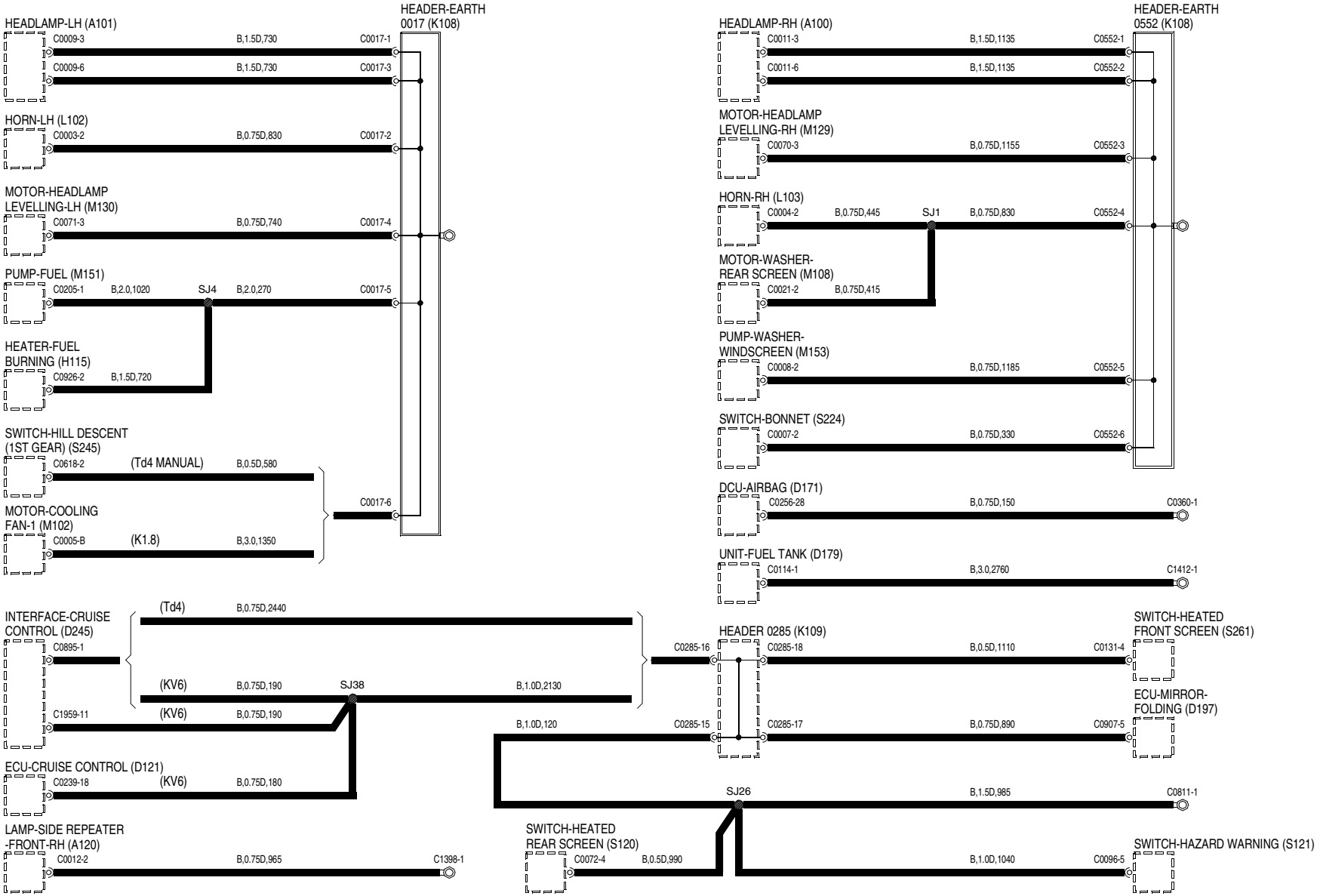
HEADER-EARTH
0017 (K108)
HEADLAMP-LH (A101)
C0009-3
B,1.5D,730
C0017-1
C0009-6
B,1.5D,730
C0017-3
HORN-LH (L102)
C0003-2
B,0.75D,830
C0017-2
MOTOR-HEADLAMP
LEVELLING-LH (M130)
C0071-3
B,0.75D,740
C0017-4
PUMP-FUEL (M151)
C0205-1
B,2.0,1020
SJ4
B,2.0,270
C0017-5
HEATER-FUEL
BURNING (H115)
C0926-2
B,1.5D,720
SWITCH-HILL DESCENT
(1ST GEAR) (S245)
C0618-2
(Td4 MANUAL)
B,0.5D,580
C0017-6
MOTOR-COOLING
FAN-1 (M102)
C0005-B
(K1.8)
B,3.0,1350
HEADER-EARTH
0552 (K108)
HEADLAMP-RH (A100)
C0011-3
B,1.5D,1135
C0552-1
C0011-6
B,1.5D,1135
C0552-2
MOTOR-HEADLAMP
LEVELLING-RH (M129)
C0070-3
B,0.75D,1155
C0552-3
HORN-RH (L103)
C0004-2
B,0.75D,445
SJ1
B,0.75D,830
C0552-4
MOTOR-WASHER-
REAR SCREEN (M108)
C0021-2
B,0.75D,415
PUMP-WASHER-
WINDSCREEN (M153)
C0008-2
B,0.75D,1185
C0552-5
SWITCH-BONNET (S224)
C0007-2
B,0.75D,330
C0552-6
DCU-AIRBAG (D171)
C0256-28
B,0.75D,150
C0360-1
UNIT-FUEL TANK (D179)
C0114-1
B,3.0,2760
C1412-1
INTERFACE-CRUISE
CONTROL (D245)
C0895-1
(Td4)
B,0.75D,2440
(KV6)
B,0.75D,190
SJ38
B,1.0D,2130
C1959-11
(KV6)
B,0.75D,190
ECU-CRUISE CONTROL (D121)
C0239-18
(KV6)
B,0.75D,180
LAMP-SIDE REPEATER
-FRONT-RH (A120)
C0012-2
B,0.75D,965
C1398-1
HEADER 0285 (K109)
C0285-16
C0285-18
B,0.5D,1110
C0131-4
SWITCH-HEATED
FRONT SCREEN (S261)
B,1.0D,120
C0285-15
C0285-17
B,0.75D,890
C0907-5
ECU-MIRROR-
FOLDING (D197)
SJ26
B,1.5D,985
C0811-1
SWITCH-HEATED
REAR SCREEN (S120)
C0072-4
B,0.5D,990
B,1.0D,1040
C0096-5
SWITCH-HAZARD WARNING (S121)
VWR004060-A-01

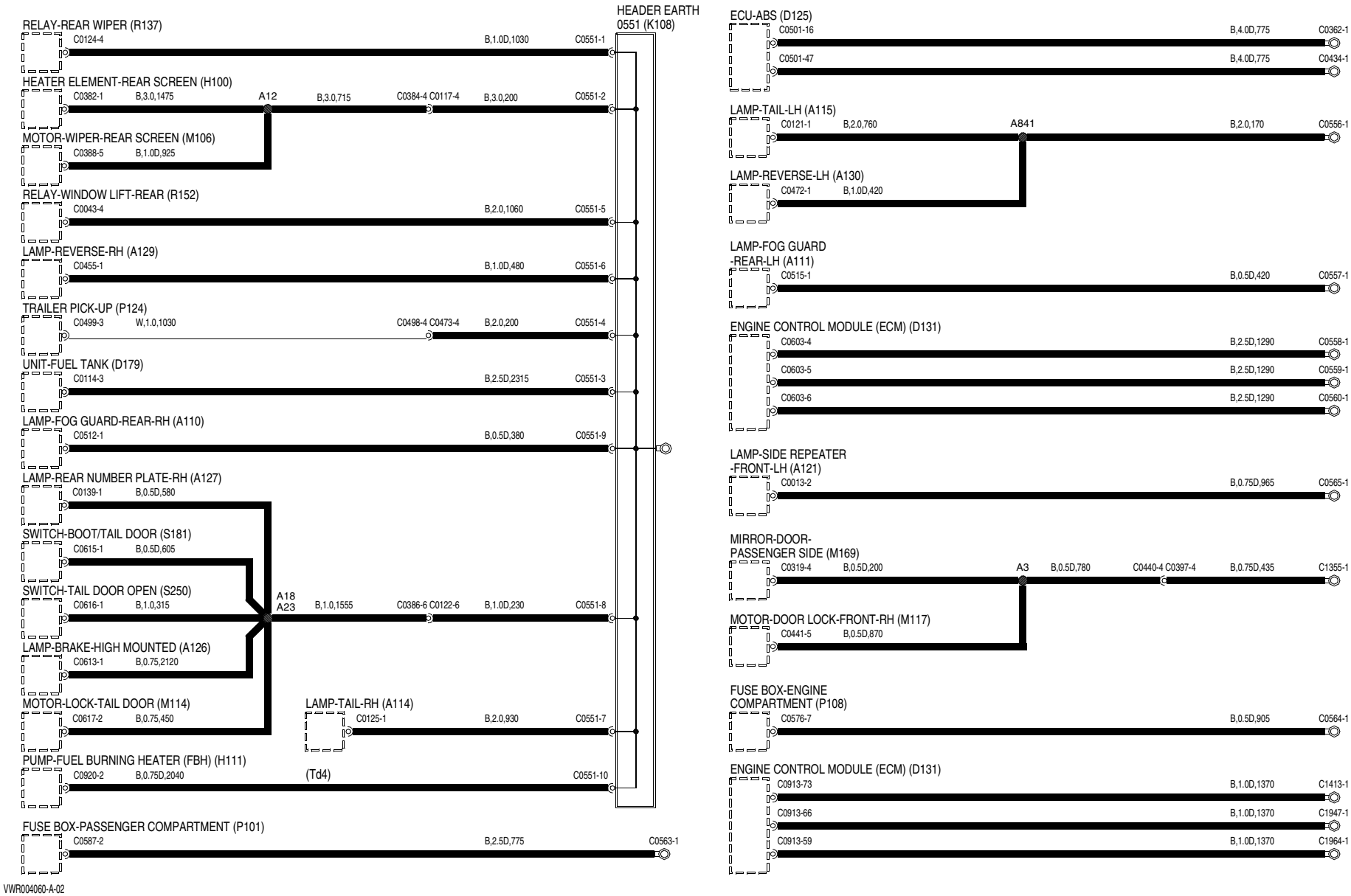
HEADER EARTH
0551 (K108)
RELAY-REAR WIPER (R137)
C0124-4
B,1.0D,1030
C0551-1
HEATER ELEMENT-REAR SCREEN (H100)
C0382-1
B,3.0,1475
A12
B,3.0,715
C0384-4 C0117-4
B,3.0,200
C0551-2
MOTOR-WIPER-REAR SCREEN (M106)
C0388-5
B,1.0D,925
RELAY-WINDOW LIFT-REAR (R152)
C0043-4
B,2.0,1060
C0551-5
LAMP-REVERSE-RH (A129)
C0455-1
B,1.0D,480
C0551-6
TRAILER PICK-UP (P124)
C0499-3
W,1.0,1030
C0498-4 C0473-4
B,2.0,200
C0551-4
UNIT-FUEL TANK (D179)
C0114-3
B,2.5D,2315
C0551-3
LAMP-FOG GUARD-REAR-RH (A110)
C0512-1
B,0.5D,380
C0551-9
LAMP-REAR NUMBER PLATE-RH (A127)
C0139-1
B,0.5D,580
SWITCH-BOOT/TAIL DOOR (S181)
C0615-1
B,0.5D,605
SWITCH-TAIL DOOR OPEN (S250)
C0616-1
B,1.0,315
A18
A23
B,1.0,1555
C0386-6 C0122-6
B,1.0D,230
C0551-8
LAMP-BRAKE-HIGH MOUNTED (A126)
C0613-1
B,0.75,2120
MOTOR-LOCK-TAIL DOOR (M114)
C0617-2
B,0.75,450
LAMP-TAIL-RH (A114)
C0125-1
B,2.0,930
C0551-7
PUMP-FUEL BURNING HEATER (FBH) (H111)
C0920-2
B,0.75D,2040
(Td4)
C0551-10
FUSE BOX-PASSENGER COMPARTMENT (P101)
C0587-2
B,2.5D,775
C0563-1
ECU-ABS (D125)
C0501-16
B,4.0D,775
C0362-1
C0501-47
B,4.0D,775
C0434-1
LAMP-TAIL-LH (A115)
C0121-1
B,2.0,760
A841
B,2.0,170
C0556-1
LAMP-REVERSE-LH (A130)
C0472-1
B,1.0D,420
LAMP-FOG GUARD
-REAR-LH (A111)
C0515-1
B,0.5D,420
C0557-1
ENGINE CONTROL MODULE (ECM) (D131)
C0603-4
B,2.5D,1290
C0558-1
C0603-5
B,2.5D,1290
C0559-1
C0603-6
B,2.5D,1290
C0560-1
LAMP-SIDE REPEATER
-FRONT-LH (A121)
C0013-2
B,0.75D,965
C0565-1
MIRROR-DOOR-
PASSENGER SIDE (M169)
C0319-4
B,0.5D,200
A3
B,0.5D,780
C0440-4 C0397-4
B,0.75D,435
C1355-1
MOTOR-DOOR LOCK-FRONT-RH (M117)
C0441-5
B,0.5D,870
FUSE BOX-ENGINE
COMPARTMENT (P108)
C0576-7
B,0.5D,905
C0564-1
ENGINE CONTROL MODULE (ECM) (D131)
C0913-73
B,1.0D,1370
C1413-1
C0913-66
B,1.0D,1370
C1947-1
C0913-59
B,1.0D,1370
C1964-1
VWR004060-A-02

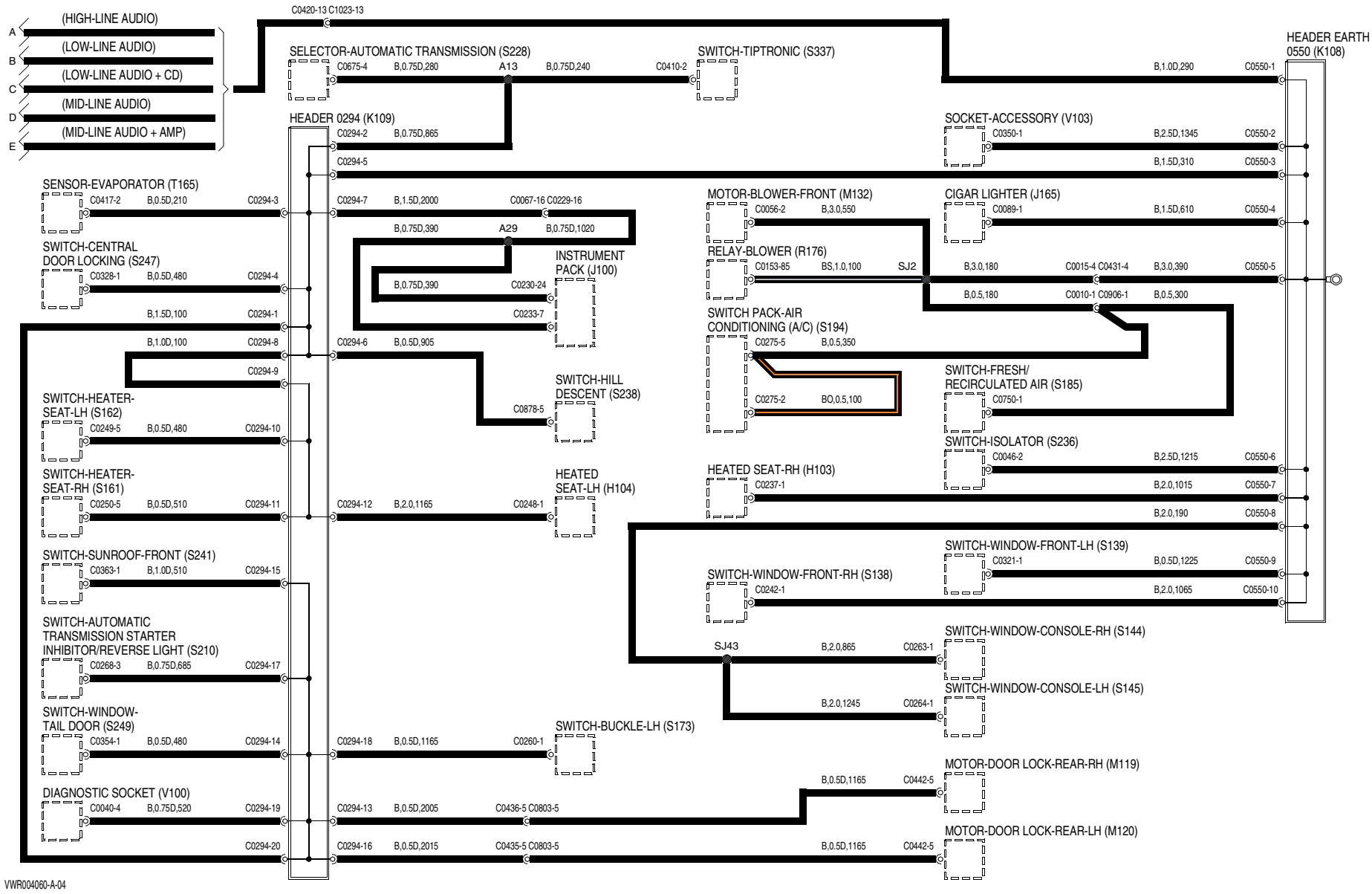
(HIGH-LINE AUDIO)
(LOW-LINE AUDIO)
(LOW-LINE AUDIO + CD)
(MID-LINE AUDIO)
(MID-LINE AUDIO + AMP)
A
B
C
D
E
C0420-13 C1023-13
SELECTOR-AUTOMATIC TRANSMISSION (S228)
C0675-4 B,0.75D,280 A13 B,0.75D,240 C0410-2
SWITCH-TIPTRONIC (S337)
HEADER EARTH
0550 (K108)
B,1.0D,290 C0550-1
HEADER 0294 (K109)
C0294-2 B,0.75D,865
SOCKET-ACCESSORY (V103)
C0350-1 B,2.5D,1345 C0550-2
C0294-5
B,1.5D,310 C0550-3
SENSOR-EVAPORATOR (T165)
C0417-2 B,0.5D,210 C0294-3
C0294-7 B,1.5D,2000 C0067-16 C0229-16
MOTOR-BLOWER-FRONT (M132)
C0056-2 B,3.0,550
CIGAR LIGHTER (J165)
C0089-1 B,1.5D,610 C0550-4
B,0.75D,390 A29 B,0.75D,1020
SWITCH-CENTRAL
DOOR LOCKING (S247)
C0328-1 B,0.5D,480 C0294-4
INSTRUMENT
PACK (J100)
RELAY-BLOWER (R176)
C0153-85 BS,1.0,100 SJ2 B,3.0,180 C0015-4 C0431-4 B,3.0,390 C0550-5
B,0.75D,390 C0230-24
B,0.5,180 C0010-1 C0906-1 B,0.5,300
C0233-7
B,1.5D,100 C0294-1
SWITCH PACK-AIR
CONDITIONING (A/C) (S194)
C0275-5 B,0.5,350
B,1.0D,100 C0294-8
C0294-6 B,0.5D,905
C0294-9
SWITCH-FRESH/
RECIRCULATED AIR (S185)
C0750-1
SWITCH-HILL
DESCENT (S238)
C0275-2 BO,0.5,100
SWITCH-HEATER-
SEAT-LH (S162)
C0878-5
C0249-5 B,0.5D,480 C0294-10
SWITCH-ISOLATOR (S236)
C0046-2 B,2.5D,1215 C0550-6
SWITCH-HEATER-
SEAT-RH (S161)
HEATED
SEAT-LH (H104)
HEATED SEAT-RH (H103)
C0237-1 B,2.0,1015 C0550-7
C0250-5 B,0.5D,510 C0294-11
C0294-12 B,2.0,1165 C0248-1
B,2.0,190 C0550-8
SWITCH-SUNROOF-FRONT (S241)
C0363-1 B,1.0D,510 C0294-15
SWITCH-WINDOW-FRONT-LH (S139)
C0321-1 B,0.5D,1225 C0550-9
SWITCH-WINDOW-FRONT-RH (S138)
C0242-1 B,2.0,1065 C0550-10
SWITCH-AUTOMATIC
TRANSMISSION STARTER
INHIBITOR/REVERSE LIGHT (S210)
SJ43 B,2.0,865 C0263-1
SWITCH-WINDOW-CONSOLE-RH (S144)
C0268-3 B,0.75D,685 C0294-17
SWITCH-WINDOW-CONSOLE-LH (S145)
B,2.0,1245 C0264-1
SWITCH-WINDOW-
TAIL DOOR (S249)
SWITCH-BUCKLE-LH (S173)
C0354-1 B,0.5D,480 C0294-14
C0294-18 B,0.5D,1165 C0260-1
MOTOR-DOOR LOCK-REAR-RH (M119)
B,0.5D,1165 C0442-5
DIAGNOSTIC SOCKET (V100)
C0040-4 B,0.75D,520 C0294-19
C0294-13 B,0.5D,2005 C0436-5 C0803-5
MOTOR-DOOR LOCK-REAR-LH (M120)
C0294-20
C0294-16 B,0.5D,2015 C0435-5 C0803-5
B,0.5D,1165 C0442-5
VWR004060-A-04

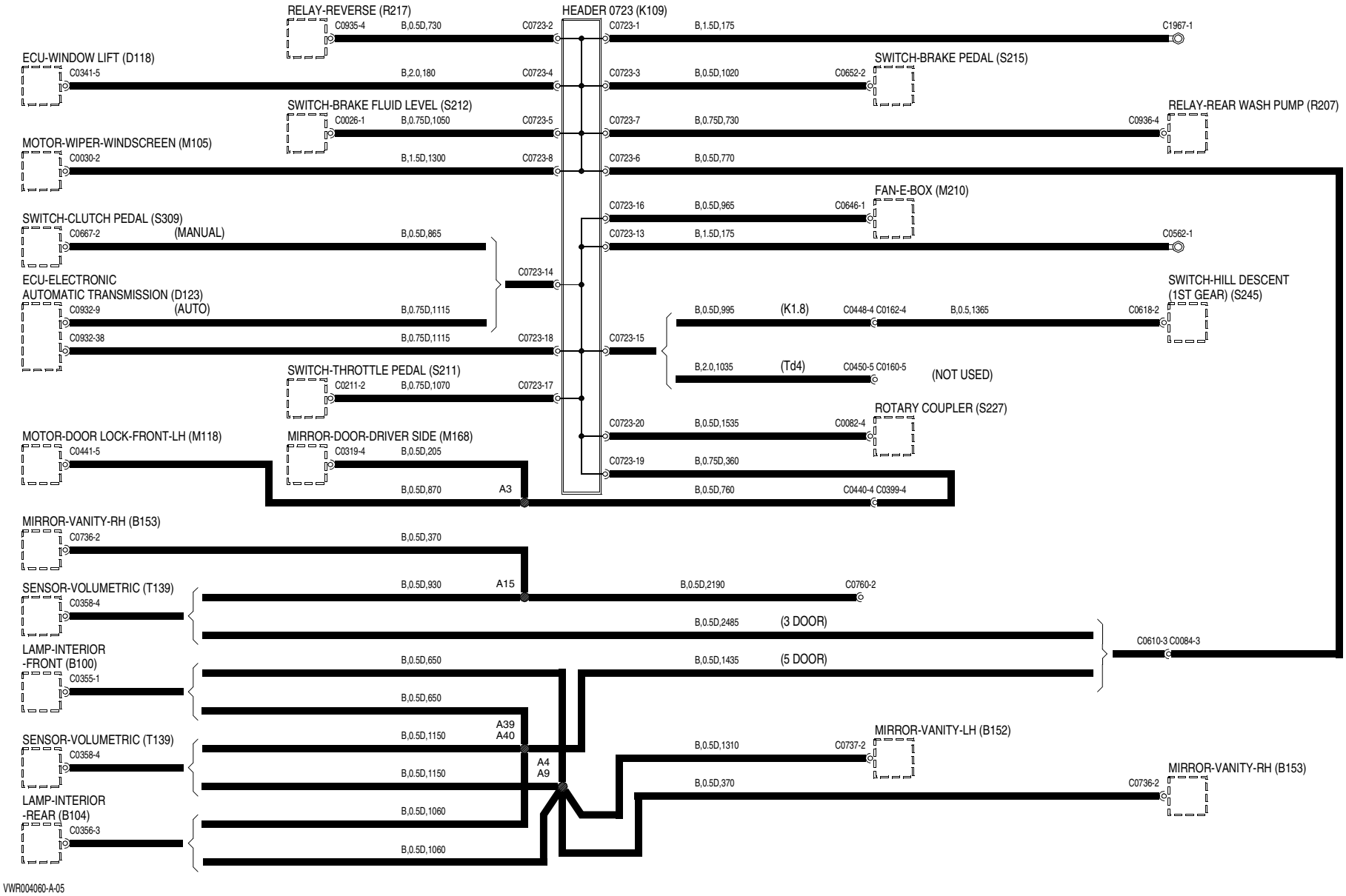
RELAY-REVERSE (R217)
C0935-4
B,0.5D,730
C0723-2
HEADER 0723 (K109)
C0723-1
B,1.5D,175
C1967-1
ECU-WINDOW LIFT (D118)
C0341-5
B,2.0,180
C0723-4
C0723-3
B,0.5D,1020
C0652-2
SWITCH-BRAKE PEDAL (S215)
SWITCH-BRAKE FLUID LEVEL (S212)
C0026-1
B,0.75D,1050
C0723-5
C0723-7
B,0.75D,730
C0936-4
RELAY-REAR WASH PUMP (R207)
MOTOR-WIPER-WINDSCREEN (M105)
C0030-2
B,1.5D,1300
C0723-8
C0723-6
B,0.5D,770
FAN-E-BOX (M210)
C0723-16
B,0.5D,965
C0646-1
SWITCH-CLUTCH PEDAL (S309)
C0667-2
(MANUAL)
B,0.5D,865
C0723-13
B,1.5D,175
C0562-1
C0723-14
ECU-ELECTRONIC
AUTOMATIC TRANSMISSION (D123)
C0932-9
(AUTO)
B,0.75D,1115
SWITCH-HILL DESCENT
(1ST GEAR) (S245)
B,0.5D,995
(K1.8)
C0448-4 C0162-4
B,0.5,1365
C0618-2
C0932-38
B,0.75D,1115
C0723-18
C0723-15
B,2.0,1035
(Td4)
C0450-5 C0160-5
(NOT USED)
SWITCH-THROTTLE PEDAL (S211)
C0211-2
B,0.75D,1070
C0723-17
ROTARY COUPLER (S227)
C0723-20
B,0.5D,1535
C0082-4
MOTOR-DOOR LOCK-FRONT-LH (M118)
C0441-5
MIRROR-DOOR-DRIVER SIDE (M168)
C0319-4
B,0.5D,205
C0723-19
B,0.75D,360
B,0.5D,870
A3
B,0.5D,760
C0440-4 C0399-4
MIRROR-VANITY-RH (B153)
C0736-2
B,0.5D,370
SENSOR-VOLUMETRIC (T139)
C0358-4
B,0.5D,930
A15
B,0.5D,2190
C0760-2
B,0.5D,2485
(3 DOOR)
C0610-3 C0084-3
LAMP-INTERIOR
-FRONT (B100)
C0355-1
B,0.5D,650
B,0.5D,1435
(5 DOOR)
B,0.5D,650
A39
A40
B,0.5D,1150
SENSOR-VOLUMETRIC (T139)
C0358-4
MIRROR-VANITY-LH (B152)
B,0.5D,1310
C0737-2
A4
A9
B,0.5D,1150
MIRROR-VANITY-RH (B153)
B,0.5D,370
C0736-2
LAMP-INTERIOR
-REAR (B104)
C0356-3
B,0.5D,1060
B,0.5D,1060
VWR004060-A-05

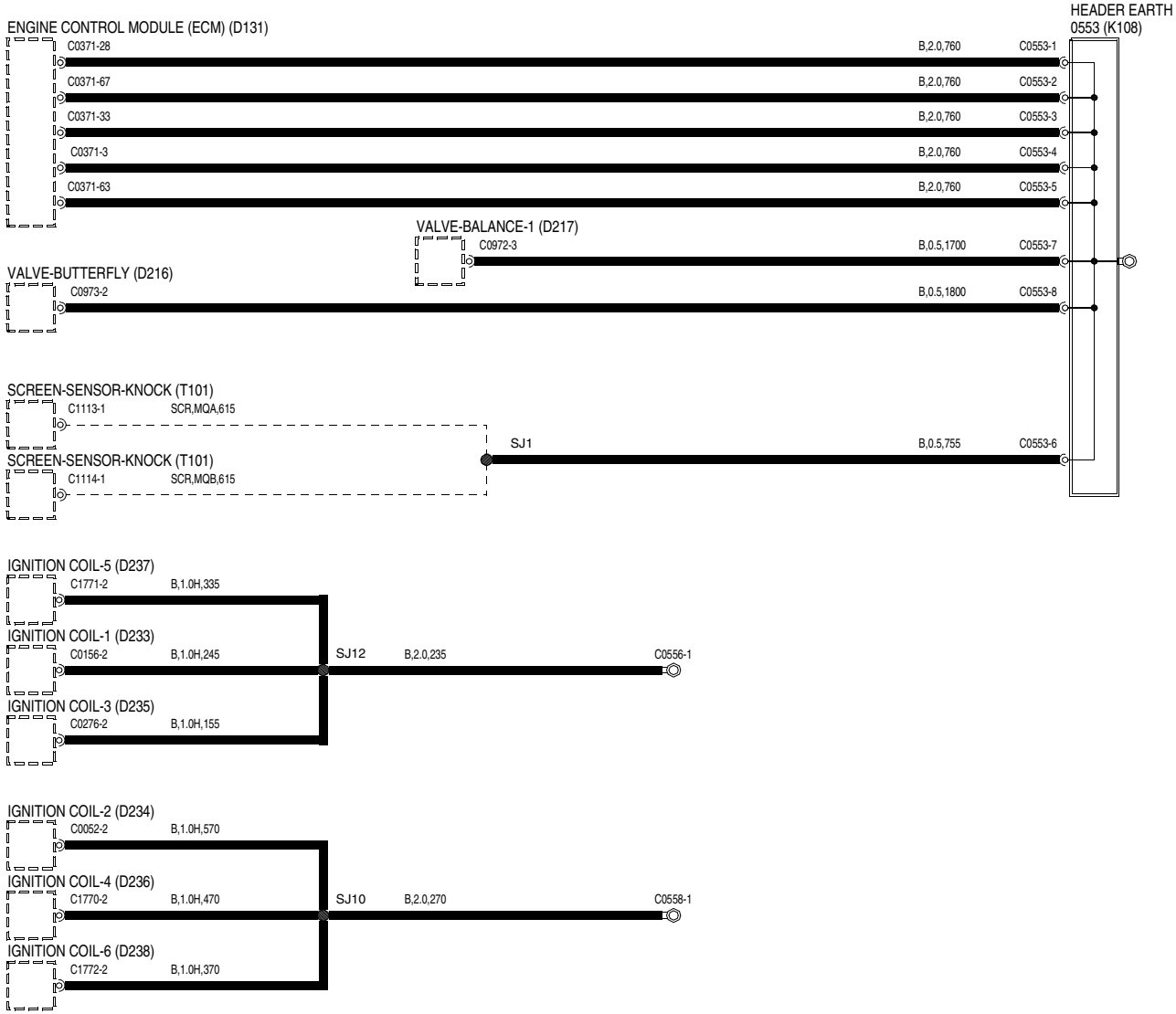

VWR004060-A-06

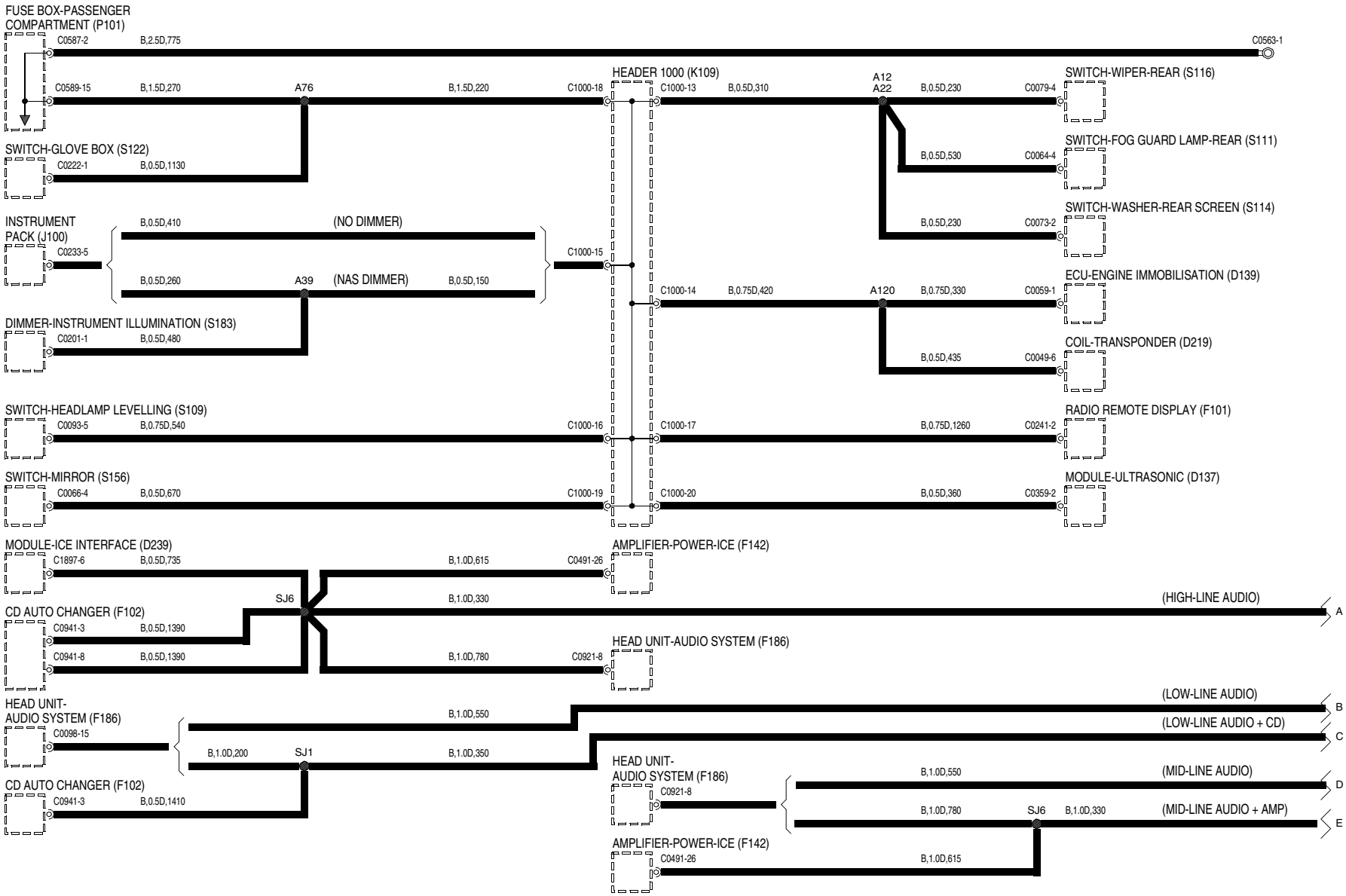
FUSE BOX-PASSENGER COMPARTMENT (P101)
C0587-2
B,2.5D,775
C0563-1
C0589-15
B,1.5D,270
A76
B,1.5D,220
C1000-18
HEADER 1000 (K109)
C1000-13
B,0.5D,310
A12
A22
B,0.5D,230
C0079-4
SWITCH-WIPER-REAR (S116)
SWITCH-GLOVE BOX (S122)
C0222-1
B,0.5D,1130
B,0.5D,530
C0064-4
SWITCH-FOG GUARD LAMP-REAR (S111)
INSTRUMENT PACK (J100)
B,0.5D,410
(NO DIMMER)
B,0.5D,230
C0073-2
SWITCH-WASHER-REAR SCREEN (S114)
C0233-5
C1000-15
B,0.5D,260
A39
(NAS DIMMER)
B,0.5D,150
C1000-14
B,0.75D,420
A120
B,0.75D,330
C0059-1
ECU-ENGINE IMMOBILISATION (D139)
DIMMER-INSTRUMENT ILLUMINATION (S183)
C0201-1
B,0.5D,480
B,0.5D,435
C0049-6
COIL-TRANSPONDER (D219)
SWITCH-HEADLAMP LEVELLING (S109)
C0093-5
B,0.75D,540
C1000-16
C1000-17
B,0.75D,1260
C0241-2
RADIO REMOTE DISPLAY (F101)
SWITCH-MIRROR (S156)
C0066-4
B,0.5D,670
C1000-19
C1000-20
B,0.5D,360
C0359-2
MODULE-ULTRASONIC (D137)
MODULE-ICE INTERFACE (D239)
C1897-6
B,0.5D,735
B,1.0D,615
C0491-26
AMPLIFIER-POWER-ICE (F142)
SJ6
B,1.0D,330
(HIGH-LINE AUDIO)
A
CD AUTO CHANGER (F102)
C0941-3
B,0.5D,1390
C0941-8
B,0.5D,1390
B,1.0D,780
C0921-8
HEAD UNIT-AUDIO SYSTEM (F186)
(LOW-LINE AUDIO)
B
HEAD UNIT-AUDIO SYSTEM (F186)
C0098-15
B,1.0D,550
(LOW-LINE AUDIO + CD)
C
B,1.0D,200
SJ1
B,1.0D,350
HEAD UNIT-AUDIO SYSTEM (F186)
C0921-8
B,1.0D,550
(MID-LINE AUDIO)
D
CD AUTO CHANGER (F102)
C0941-3
B,0.5D,1410
B,1.0D,780
SJ6
B,1.0D,330
(MID-LINE AUDIO + AMP)
E
AMPLIFIER-POWER-ICE (F142)
C0491-26
B,1.0D,615
VWR004060-A-07

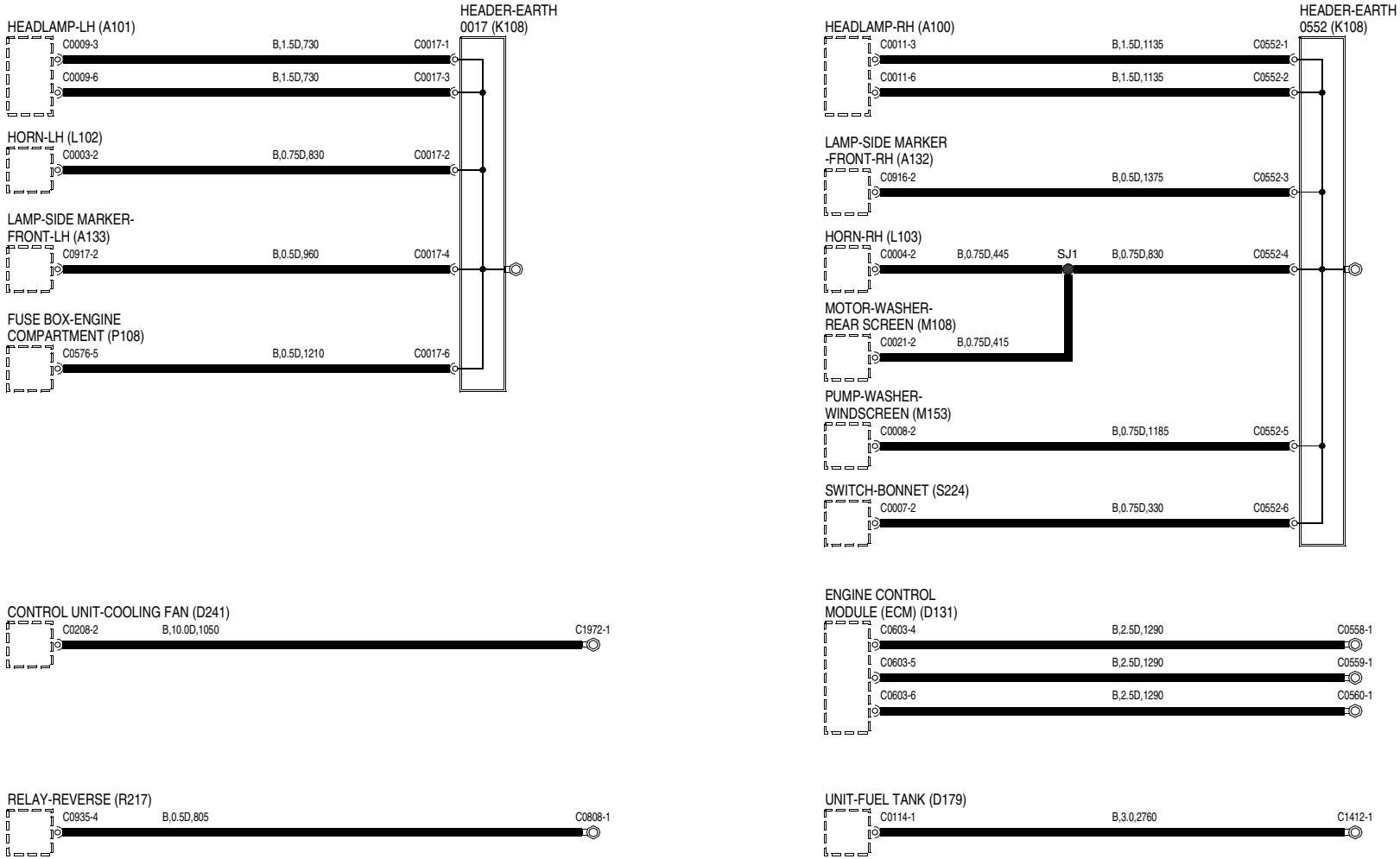

VWR004460-A-01

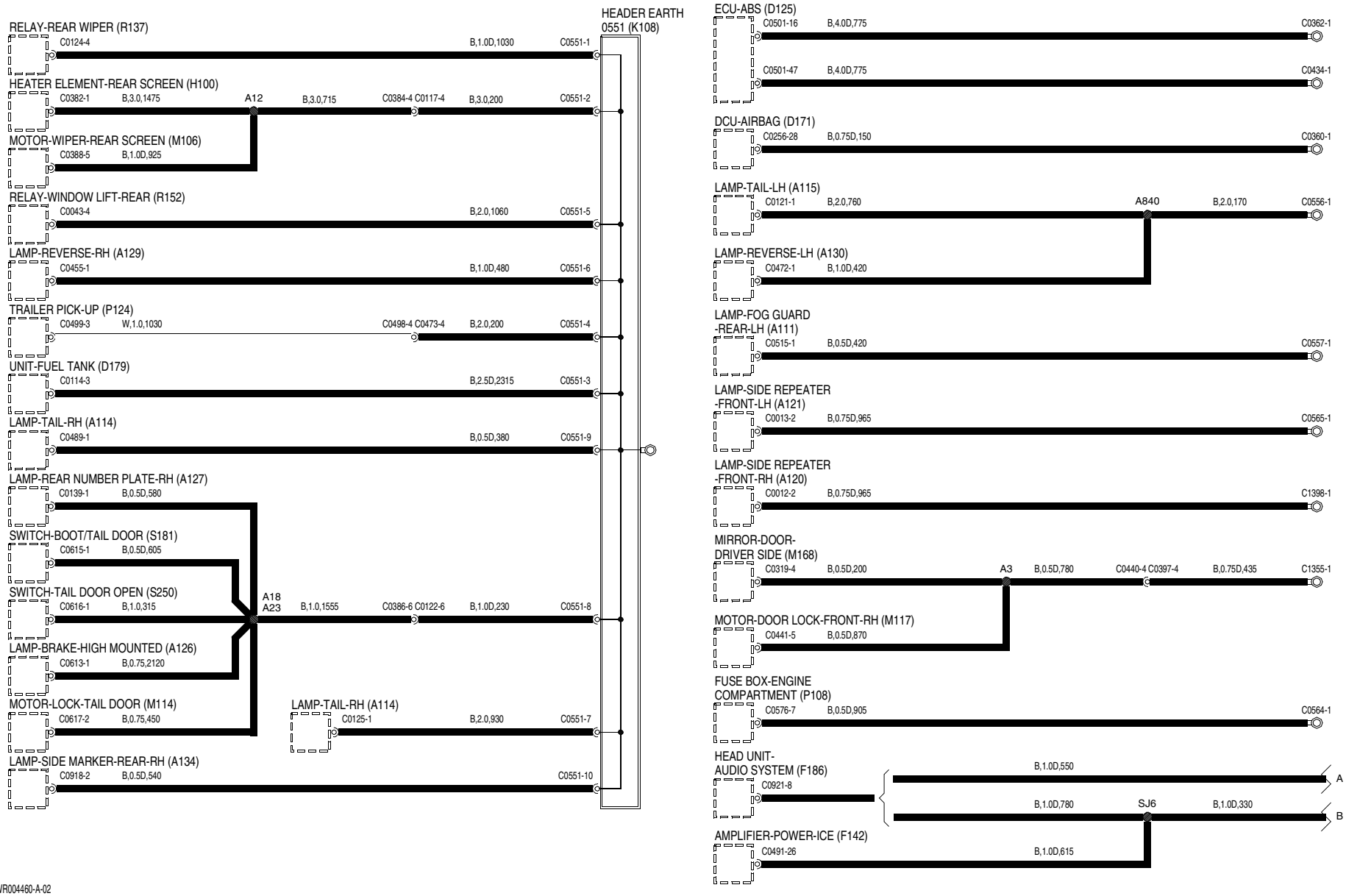
HEADER EARTH
0551 (K108)
RELAY-REAR WIPER (R137)
C0124-4 B,1.0D,1030 C0551-1
HEATER ELEMENT-REAR SCREEN (H100)
C0382-1 B,3.0,1475 A12 B,3.0,715 C0384-4 C0117-4 B,3.0,200 C0551-2
MOTOR-WIPER-REAR SCREEN (M106)
C0388-5 B,1.0D,925
RELAY-WINDOW LIFT-REAR (R152)
C0043-4 B,2.0,1060 C0551-5
LAMP-REVERSE-RH (A129)
C0455-1 B,1.0D,480 C0551-6
TRAILER PICK-UP (P124)
C0499-3 W,1.0,1030 C0498-4 C0473-4 B,2.0,200 C0551-4
UNIT-FUEL TANK (D179)
C0114-3 B,2.5D,2315 C0551-3
LAMP-TAIL-RH (A114)
C0489-1 B,0.5D,380 C0551-9
LAMP-REAR NUMBER PLATE-RH (A127)
C0139-1 B,0.5D,580
SWITCH-BOOT/TAIL DOOR (S181)
C0615-1 B,0.5D,605
SWITCH-TAIL DOOR OPEN (S250)
C0616-1 B,1.0,315 A18 A23 B,1.0,1555 C0386-6 C0122-6 B,1.0D,230 C0551-8
LAMP-BRAKE-HIGH MOUNTED (A126)
C0613-1 B,0.75,2120
MOTOR-LOCK-TAIL DOOR (M114)
C0617-2 B,0.75,450
LAMP-TAIL-RH (A114)
C0125-1 B,2.0,930 C0551-7
LAMP-SIDE MARKER-REAR-RH (A134)
C0918-2 B,0.5D,540 C0551-10
ECU-ABS (D125)
C0501-16 B,4.0D,775 C0362-1
C0501-47 B,4.0D,775 C0434-1
DCU-AIRBAG (D171)
C0256-28 B,0.75D,150 C0360-1
LAMP-TAIL-LH (A115)
C0121-1 B,2.0,760 A840 B,2.0,170 C0556-1
LAMP-REVERSE-LH (A130)
C0472-1 B,1.0D,420
LAMP-FOG GUARD
-REAR-LH (A111)
C0515-1 B,0.5D,420 C0557-1
LAMP-SIDE REPEATER
-FRONT-LH (A121)
C0013-2 B,0.75D,965 C0565-1
LAMP-SIDE REPEATER
-FRONT-RH (A120)
C0012-2 B,0.75D,965 C1398-1
MIRROR-DOOR-
DRIVER SIDE (M168)
C0319-4 B,0.5D,200 A3 B,0.5D,780 C0440-4 C0397-4 B,0.75D,435 C1355-1
MOTOR-DOOR LOCK-FRONT-RH (M117)
C0441-5 B,0.5D,870
FUSE BOX-ENGINE
COMPARTMENT (P108)
C0576-7 B,0.5D,905 C0564-1
HEAD UNIT-
AUDIO SYSTEM (F186)
C0921-8
B,1.0D,550 A
B,1.0D,780 SJ6 B,1.0D,330 B
AMPLIFIER-POWER-ICE (F142)
C0491-26 B,1.0D,615
VWR004460-A-02

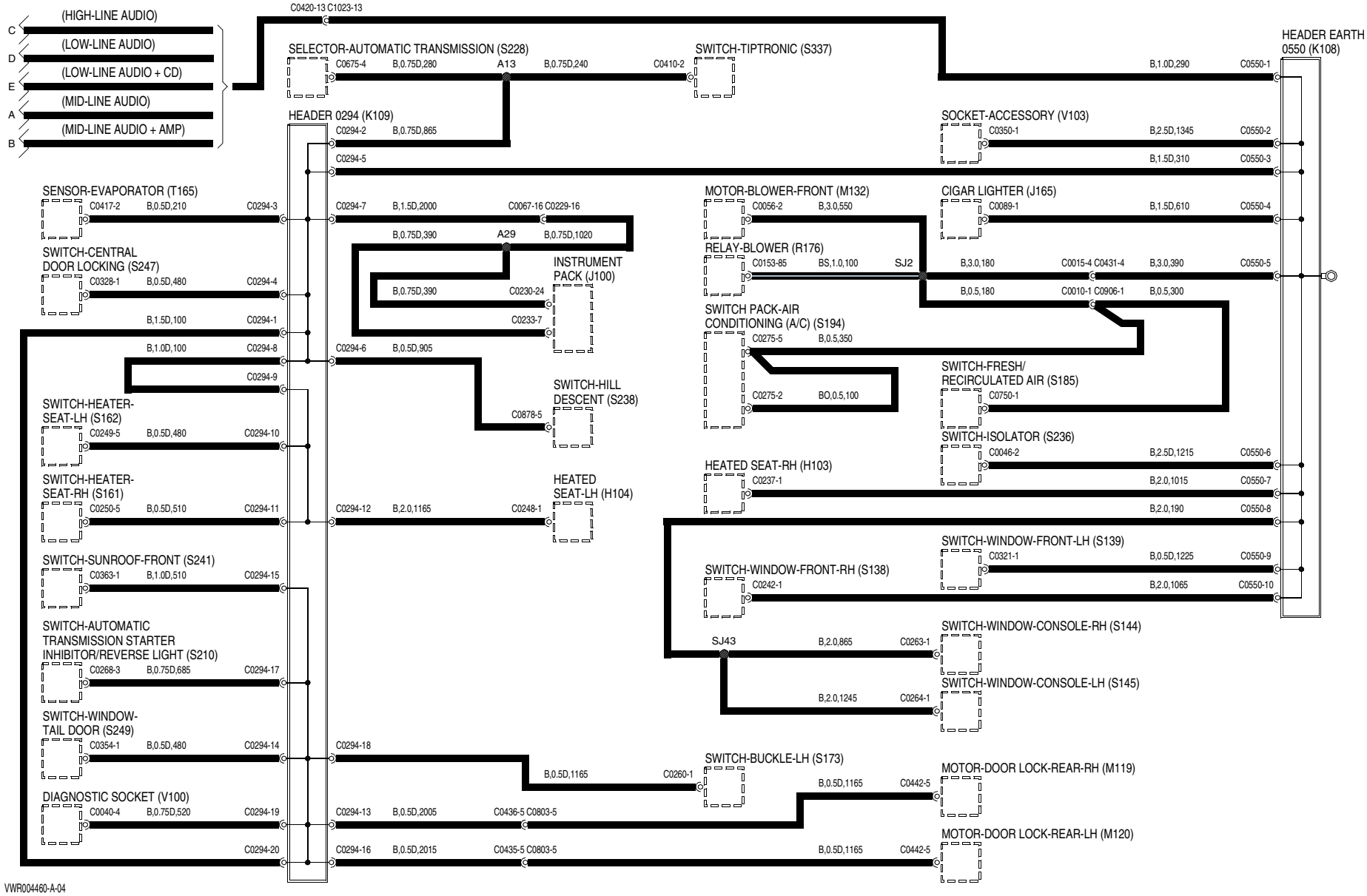
(HIGH-LINE AUDIO)
(LOW-LINE AUDIO)
(LOW-LINE AUDIO + CD)
(MID-LINE AUDIO)
(MID-LINE AUDIO + AMP)
C
D
E
A
B
C0420-13 C1023-13
SELECTOR-AUTOMATIC TRANSMISSION (S228)
C0675-4 B,0.75D,280 A13 B,0.75D,240 C0410-2
SWITCH-TIPTRONIC (S337)
B,1.0D,290 C0550-1
HEADER EARTH
0550 (K108)
HEADER 0294 (K109)
C0294-2 B,0.75D,865
C0294-5
SOCKET-ACCESSORY (V103)
C0350-1 B,2.5D,1345 C0550-2
B,1.5D,310 C0550-3
SENSOR-EVAPORATOR (T165)
C0417-2 B,0.5D,210 C0294-3
C0294-7 B,1.5D,2000 C0067-16 C0229-16
B,0.75D,390 A29 B,0.75D,1020
MOTOR-BLOWER-FRONT (M132)
C0056-2 B,3.0,550
CIGAR LIGHTER (J165)
C0089-1 B,1.5D,610 C0550-4
SWITCH-CENTRAL
DOOR LOCKING (S247)
C0328-1 B,0.5D,480 C0294-4
INSTRUMENT
PACK (J100)
B,0.75D,390 C0230-24
C0233-7
RELAY-BLOWER (R176)
C0153-85 BS,1.0,100 SJ2
B,3.0,180 C0015-4 C0431-4 B,3.0,390 C0550-5
B,0.5,180 C0010-1 C0906-1 B,0.5,300
B,1.5D,100 C0294-1
SWITCH PACK-AIR
CONDITIONING (A/C) (S194)
C0275-5 B,0.5,350
B,1.0D,100 C0294-8
C0294-6 B,0.5D,905
C0294-9
SWITCH-FRESH/
RECIRCULATED AIR (S185)
C0750-1
SWITCH-HILL
DESCENT (S238)
C0275-2 BO,0.5,100
SWITCH-HEATER-
SEAT-LH (S162)
C0878-5
C0249-5 B,0.5D,480 C0294-10
SWITCH-ISOLATOR (S236)
C0046-2 B,2.5D,1215 C0550-6
HEATED SEAT-RH (H103)
C0237-1 B,2.0,1015 C0550-7
SWITCH-HEATER-
SEAT-RH (S161)
C0250-5 B,0.5D,510 C0294-11
C0294-12 B,2.0,1165 C0248-1
HEATED
SEAT-LH (H104)
B,2.0,190 C0550-8
SWITCH-WINDOW-FRONT-LH (S139)
C0321-1 B,0.5D,1225 C0550-9
SWITCH-SUNROOF-FRONT (S241)
C0363-1 B,1.0D,510 C0294-15
SWITCH-WINDOW-FRONT-RH (S138)
C0242-1 B,2.0,1065 C0550-10
SWITCH-AUTOMATIC
TRANSMISSION STARTER
INHIBITOR/REVERSE LIGHT (S210)
C0268-3 B,0.75D,685 C0294-17
SJ43 B,2.0,865 C0263-1
SWITCH-WINDOW-CONSOLE-RH (S144)
SWITCH-WINDOW-CONSOLE-LH (S145)
B,2.0,1245 C0264-1
SWITCH-WINDOW-
TAIL DOOR (S249)
C0354-1 B,0.5D,480 C0294-14
C0294-18
SWITCH-BUCKLE-LH (S173)
B,0.5D,1165 C0260-1
MOTOR-DOOR LOCK-REAR-RH (M119)
B,0.5D,1165 C0442-5
DIAGNOSTIC SOCKET (V100)
C0040-4 B,0.75D,520 C0294-19
C0294-13 B,0.5D,2005 C0436-5 C0803-5
MOTOR-DOOR LOCK-REAR-LH (M120)
C0294-20
C0294-16 B,0.5D,2015 C0435-5 C0803-5
B,0.5D,1165 C0442-5
VWR004460-A-04

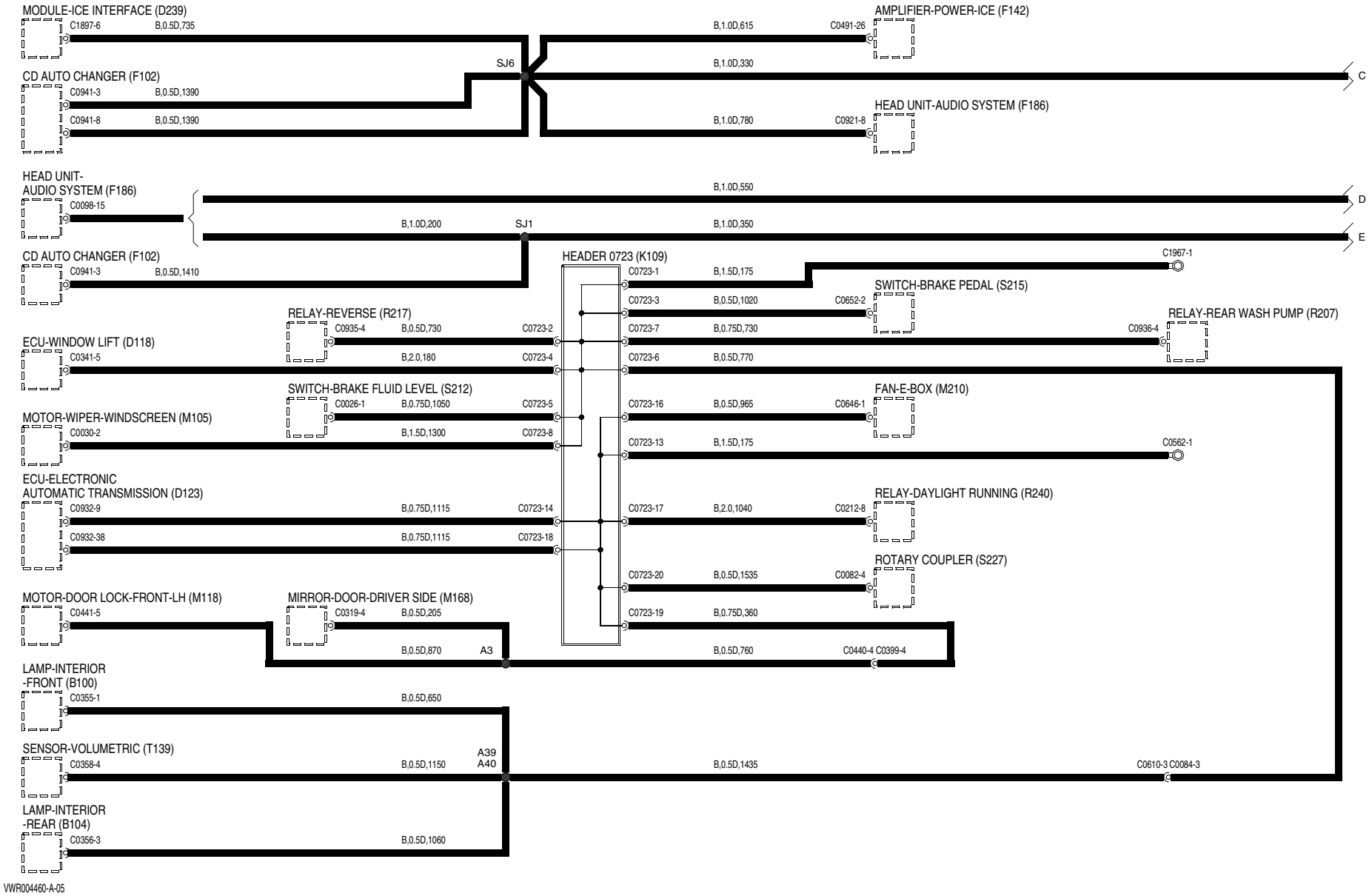
MODULE-ICE INTERFACE (D239)
C1897-6
B,0.5D,735
CD AUTO CHANGER (F102)
C0941-3
B,0.5D,1390
C0941-8
B,0.5D,1390
SJ6
B,1.0D,615
C0491-26
AMPLIFIER-POWER-ICE (F142)
B,1.0D,330
C
B,1.0D,780
C0921-8
HEAD UNIT-AUDIO SYSTEM (F186)
HEAD UNIT-
AUDIO SYSTEM (F186)
C0098-15
B,1.0D,550
D
B,1.0D,200
SJ1
B,1.0D,350
E
CD AUTO CHANGER (F102)
C0941-3
B,0.5D,1410
HEADER 0723 (K109)
C0723-1
B,1.5D,175
C1967-1
SWITCH-BRAKE PEDAL (S215)
C0723-3
B,0.5D,1020
C0652-2
RELAY-REVERSE (R217)
C0935-4
B,0.5D,730
C0723-2
C0723-7
B,0.75D,730
C0936-4
RELAY-REAR WASH PUMP (R207)
ECU-WINDOW LIFT (D118)
C0341-5
B,2.0,180
C0723-4
C0723-6
B,0.5D,770
SWITCH-BRAKE FLUID LEVEL (S212)
C0026-1
B,0.75D,1050
C0723-5
C0723-16
B,0.5D,965
C0646-1
FAN-E-BOX (M210)
MOTOR-WIPER-WINDSCREEN (M105)
C0030-2
B,1.5D,1300
C0723-8
C0723-13
B,1.5D,175
C0562-1
ECU-ELECTRONIC
AUTOMATIC TRANSMISSION (D123)
C0932-9
B,0.75D,1115
C0723-14
C0723-17
B,2.0,1040
C0212-8
RELAY-DAYLIGHT RUNNING (R240)
C0932-38
B,0.75D,1115
C0723-18
ROTARY COUPLER (S227)
C0723-20
B,0.5D,1535
C0082-4
MOTOR-DOOR LOCK-FRONT-LH (M118)
C0441-5
MIRROR-DOOR-DRIVER SIDE (M168)
C0319-4
B,0.5D,205
C0723-19
B,0.75D,360
B,0.5D,870
A3
B,0.5D,760
C0440-4 C0399-4
LAMP-INTERIOR
-FRONT (B100)
C0355-1
B,0.5D,650
SENSOR-VOLUMETRIC (T139)
C0358-4
B,0.5D,1150
A39
A40
B,0.5D,1435
C0610-3 C0084-3
LAMP-INTERIOR
-REAR (B104)
C0356-3
B,0.5D,1060
VWR004460-A-05

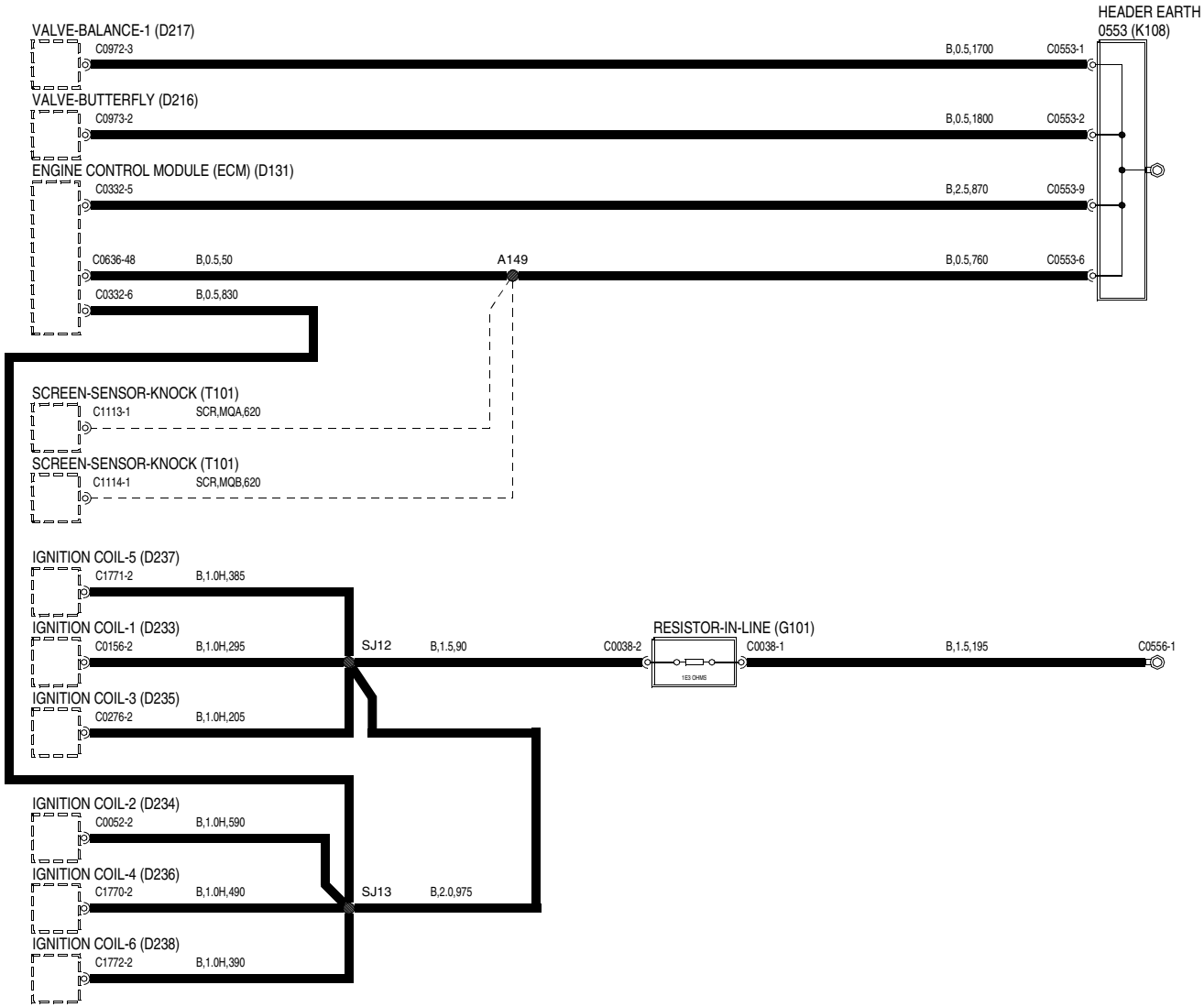

VWR004460-A-06

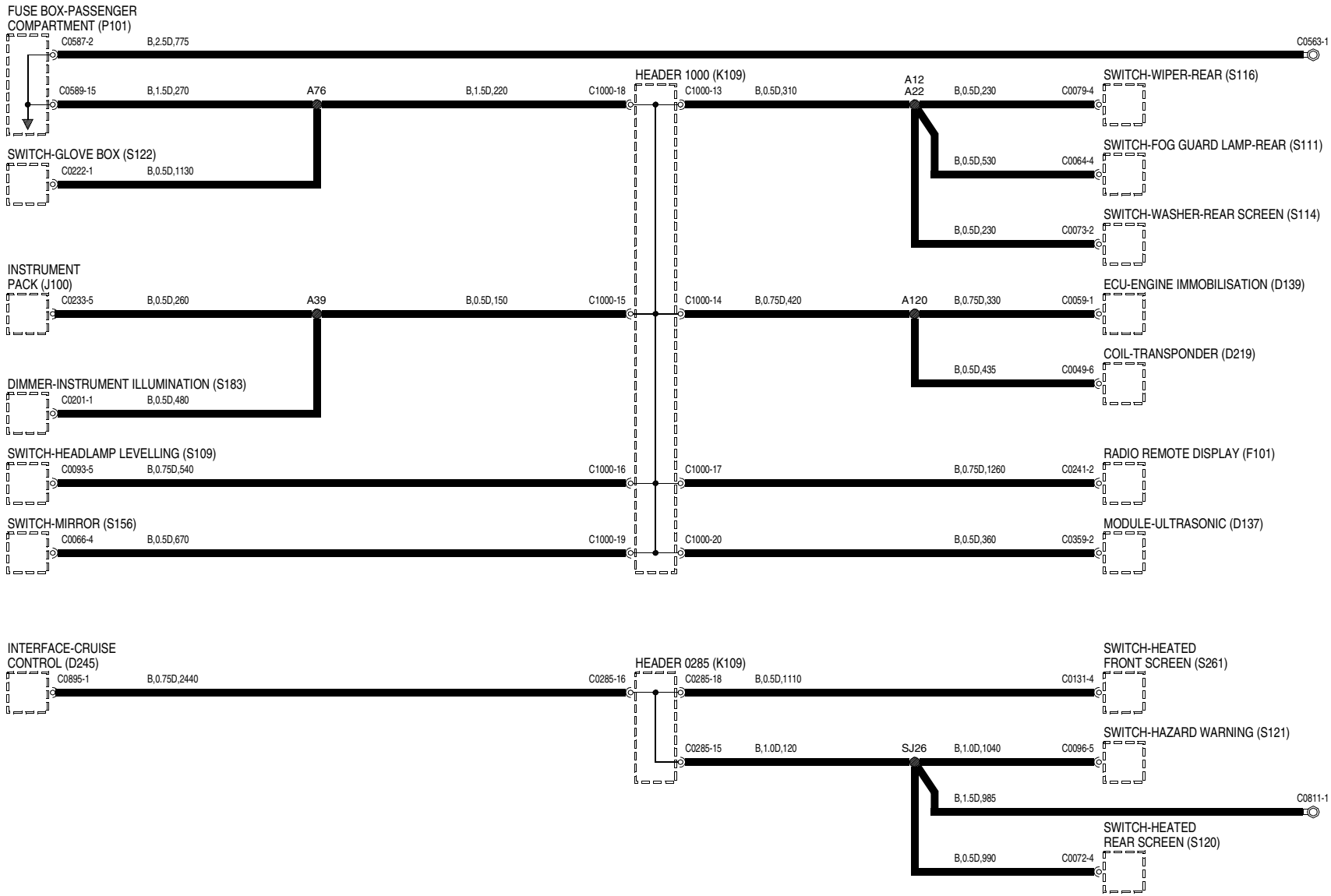

VWR004460-A-07

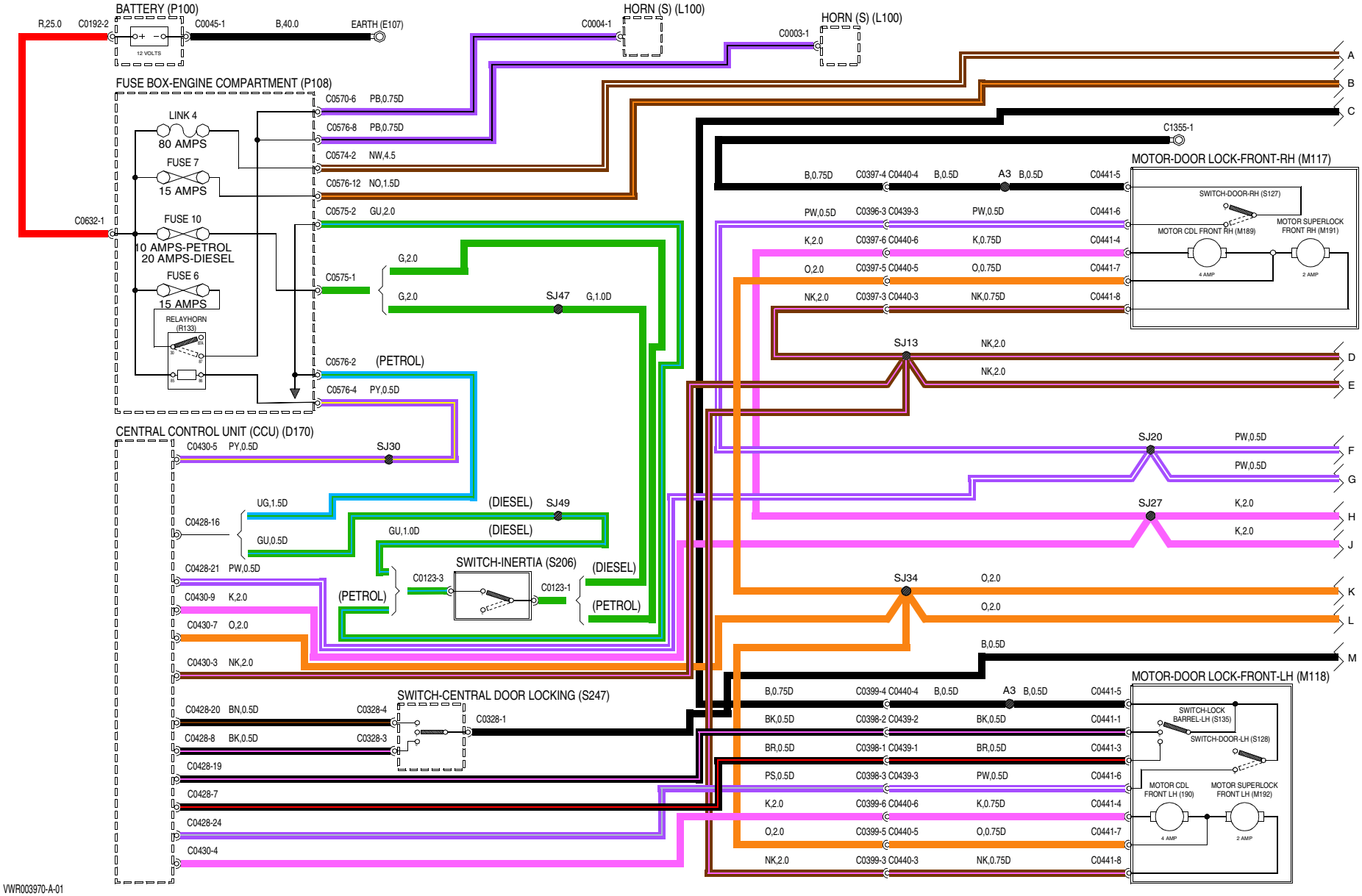
BATTERY (P100)
R,25.0
C0192-2
C0045-1
B,40.0
EARTH (E107)
12 VOLTS
HORN (S) (L100)
C0004-1
HORN (S) (L100)
C0003-1
FUSE BOX-ENGINE COMPARTMENT (P108)
LINK 4
80 AMPS
FUSE 7
15 AMPS
FUSE 10
10 AMPS-PETROL
20 AMPS-DIESEL
FUSE 6
15 AMPS
RELAYHORN
(R133)
C0632-1
C0570-6 PB,0.75D
C0576-8 PB,0.75D
C0574-2 NW,4.5
C0576-12 NO,1.5D
C0575-2 GU,2.0
C0575-1
G,2.0
G,2.0
SJ47
G,1.0D
C0576-2 (PETROL)
C0576-4 PY,0.5D
CENTRAL CONTROL UNIT (CCU) (D170)
C0430-5 PY,0.5D
SJ30
C0428-16
UG,1.5D
GU,0.5D
(DIESEL)
SJ49
GU,1.0D
(DIESEL)
C0428-21 PW,0.5D
C0430-9 K,2.0
C0430-7 O,2.0
C0430-3 NK,2.0
SWITCH-INERTIA (S206)
C0123-3
C0123-1
(PETROL)
(DIESEL)
(PETROL)
C0428-20 BN,0.5D
C0328-4
C0328-1
C0428-8 BK,0.5D
C0328-3
SWITCH-CENTRAL DOOR LOCKING (S247)
C0428-19
C0428-7
C0428-24
C0430-4
C1355-1
MOTOR-DOOR LOCK-FRONT-RH (M117)
B,0.75D C0397-4 C0440-4 B,0.5D A3 B,0.5D C0441-5
PW,0.5D C0396-3 C0439-3 PW,0.5D C0441-6
K,2.0 C0397-6 C0440-6 K,0.75D C0441-4
O,2.0 C0397-5 C0440-5 O,0.75D C0441-7
NK,2.0 C0397-3 C0440-3 NK,0.75D C0441-8
SWITCH-DOOR-RH (S127)
MOTOR CDL FRONT RH (M189)
MOTOR SUPERLOCK FRONT RH (M191)
4 AMP
2 AMP
SJ13
NK,2.0
NK,2.0
SJ20
PW,0.5D
PW,0.5D
SJ27
K,2.0
K,2.0
SJ34
O,2.0
O,2.0
B,0.5D
MOTOR-DOOR LOCK-FRONT-LH (M118)
B,0.75D C0399-4 C0440-4 B,0.5D A3 B,0.5D C0441-5
BK,0.5D C0398-2 C0439-2 BK,0.5D C0441-1
BR,0.5D C0398-1 C0439-1 BR,0.5D C0441-3
PS,0.5D C0398-3 C0439-3 PW,0.5D C0441-6
K,2.0 C0399-6 C0440-6 K,0.75D C0441-4
O,2.0 C0399-5 C0440-5 O,0.75D C0441-7
NK,2.0 C0399-3 C0440-3 NK,0.75D C0441-8
SWITCH-LOCK BARREL-LH (S135)
SWITCH-DOOR-LH (S128)
MOTOR CDL FRONT LH (190)
MOTOR SUPERLOCK FRONT LH (M192)
4 AMP
2 AMP
A
B
C
D
E
F
G
H
J
K
L
M
VWR003970-A-01

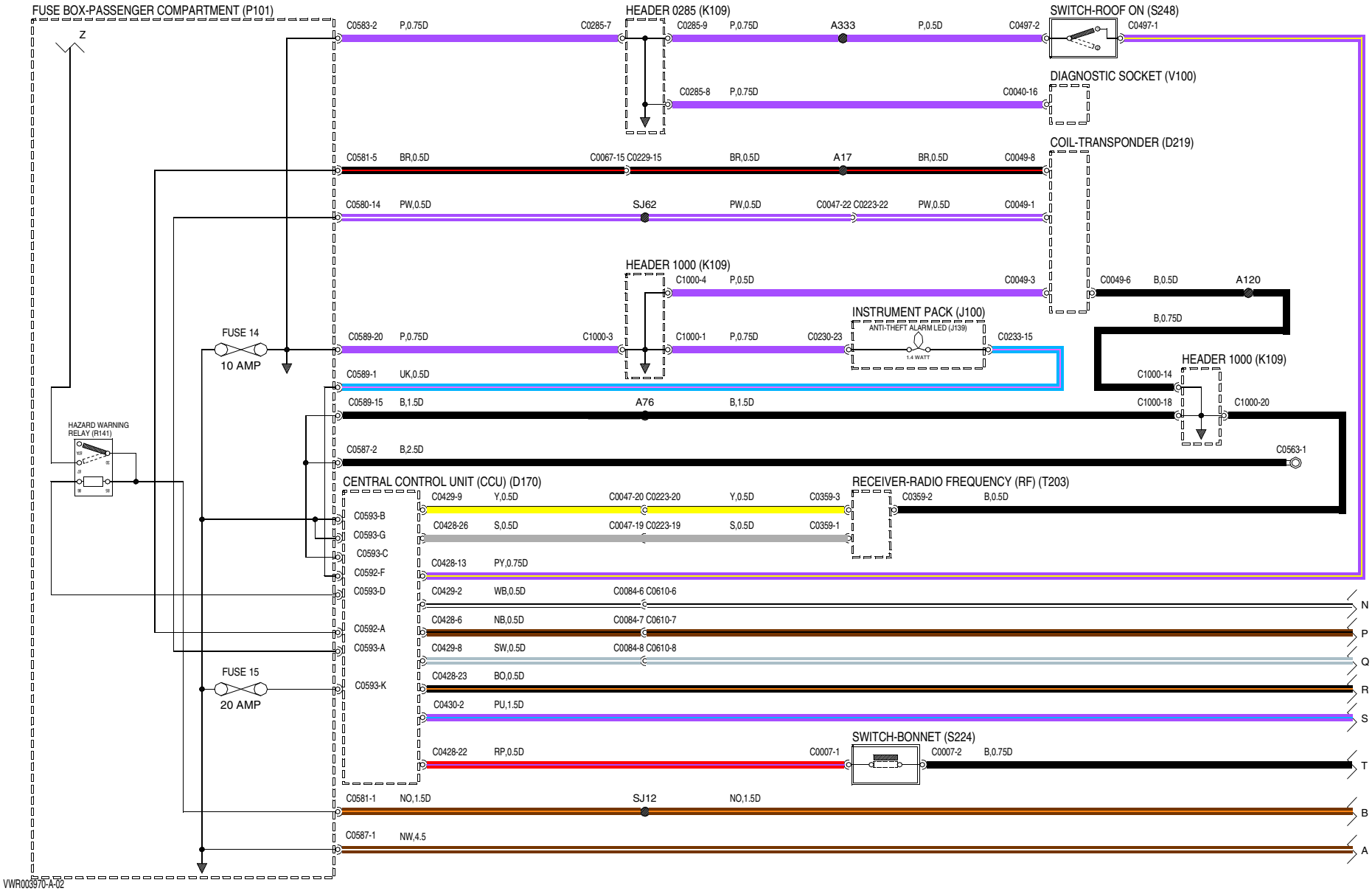
FUSE BOX-PASSENGER COMPARTMENT (P101)
Z
HEADER 0285 (K109)
SWITCH-ROOF ON (S248)
DIAGNOSTIC SOCKET (V100)
COIL-TRANSPONDER (D219)
HEADER 1000 (K109)
INSTRUMENT PACK (J100)
ANTI-THEFT ALARM LED (J139)
1.4 WATT
FUSE 14
10 AMP
HAZARD WARNING RELAY (R141)
CENTRAL CONTROL UNIT (CCU) (D170)
RECEIVER-RADIO FREQUENCY (RF) (T203)
FUSE 15
20 AMP
SWITCH-BONNET (S224)
C0583-2 P,0.75D C0285-7
C0285-9 P,0.75D A333 P,0.5D C0497-2
C0497-1
C0285-8 P,0.75D C0040-16
C0581-5 BR,0.5D C0067-15 C0229-15 BR,0.5D A17 BR,0.5D C0049-8
C0580-14 PW,0.5D SJ62 PW,0.5D C0047-22 C0223-22 PW,0.5D C0049-1
C1000-4 P,0.5D C0049-3
C0049-6 B,0.5D A120
B,0.75D
C0589-20 P,0.75D C1000-3 C1000-1 P,0.75D C0230-23 C0233-15
C0589-1 UK,0.5D
C1000-14
C0589-15 B,1.5D A76 B,1.5D C1000-18 C1000-20
C0587-2 B,2.5D C0563-1
C0429-9 Y,0.5D C0047-20 C0223-20 Y,0.5D C0359-3 C0359-2 B,0.5D
C0593-B
C0593-G
C0593-C
C0592-F
C0593-D
C0592-A
C0593-A
C0593-K
C0428-26 S,0.5D C0047-19 C0223-19 S,0.5D C0359-1
C0428-13 PY,0.75D
C0429-2 WB,0.5D C0084-6 C0610-6
C0428-6 NB,0.5D C0084-7 C0610-7
C0429-8 SW,0.5D C0084-8 C0610-8
C0428-23 BO,0.5D
C0430-2 PU,1.5D
C0428-22 RP,0.5D C0007-1 C0007-2 B,0.75D
C0581-1 NO,1.5D SJ12 NO,1.5D
C0587-1 NW,4.5
N
P
Q
R
S
T
B
A
VWR003970-A-02

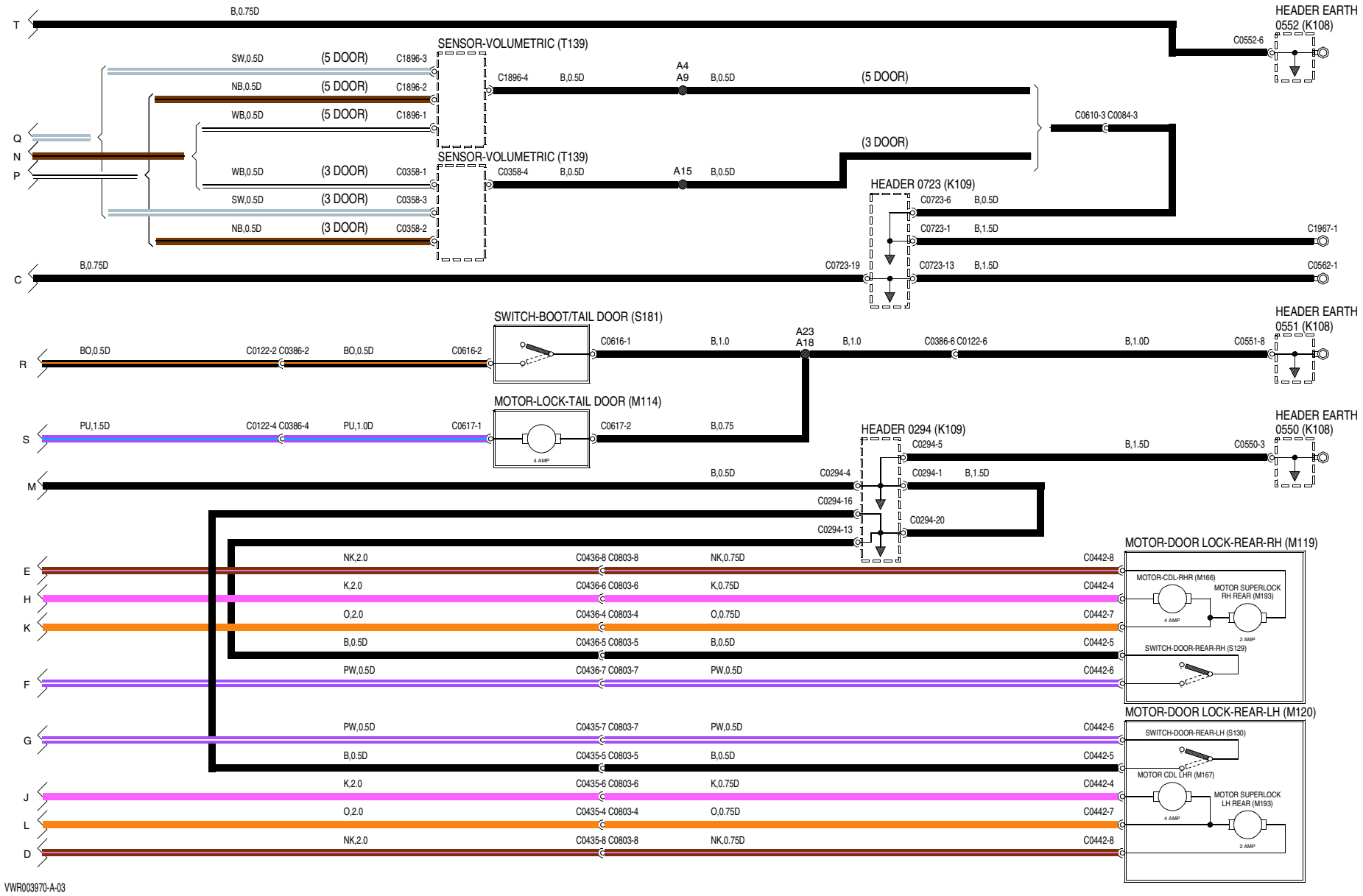
T
B,0.75D
HEADER EARTH
0552 (K108)
C0552-6
SENSOR-VOLUMETRIC (T139)
SW,0.5D (5 DOOR) C1896-3
NB,0.5D (5 DOOR) C1896-2
WB,0.5D (5 DOOR) C1896-1
C1896-4 B,0.5D A4 A9 B,0.5D (5 DOOR)
C0610-3 C0084-3
Q
N
P
(3 DOOR)
SENSOR-VOLUMETRIC (T139)
WB,0.5D (3 DOOR) C0358-1
SW,0.5D (3 DOOR) C0358-3
NB,0.5D (3 DOOR) C0358-2
C0358-4 B,0.5D A15 B,0.5D
HEADER 0723 (K109)
C0723-6 B,0.5D
C0723-1 B,1.5D
C1967-1
C
B,0.75D
C0723-19
C0723-13 B,1.5D
C0562-1
SWITCH-BOOT/TAIL DOOR (S181)
R
BO,0.5D C0122-2 C0386-2 BO,0.5D C0616-2
C0616-1 B,1.0 A23 A18 B,1.0 C0386-6 C0122-6 B,1.0D C0551-8
HEADER EARTH
0551 (K108)
MOTOR-LOCK-TAIL DOOR (M114)
S
PU,1.5D C0122-4 C0386-4 PU,1.0D C0617-1
4 AMP
C0617-2 B,0.75
HEADER 0294 (K109)
C0294-5 B,1.5D C0550-3
HEADER EARTH
0550 (K108)
M
B,0.5D C0294-4
C0294-1 B,1.5D
C0294-16
C0294-20
C0294-13
MOTOR-DOOR LOCK-REAR-RH (M119)
E
NK,2.0 C0436-8 C0803-8 NK,0.75D C0442-8
H
K,2.0 C0436-6 C0803-6 K,0.75D C0442-4
K
O,2.0 C0436-4 C0803-4 O,0.75D C0442-7
B,0.5D C0436-5 C0803-5 B,0.5D C0442-5
F
PW,0.5D C0436-7 C0803-7 PW,0.5D C0442-6
MOTOR-CDL-RHR (M166)
MOTOR SUPERLOCK
RH REAR (M193)
4 AMP
2 AMP
SWITCH-DOOR-REAR-RH (S129)
MOTOR-DOOR LOCK-REAR-LH (M120)
G
PW,0.5D C0435-7 C0803-7 PW,0.5D C0442-6
B,0.5D C0435-5 C0803-5 B,0.5D C0442-5
J
K,2.0 C0435-6 C0803-6 K,0.75D C0442-4
L
O,2.0 C0435-4 C0803-4 O,0.75D C0442-7
D
NK,2.0 C0435-8 C0803-8 NK,0.75D C0442-8
SWITCH-DOOR-REAR-LH (S130)
MOTOR CDL LHR (M167)
MOTOR SUPERLOCK
LH REAR (M193)
4 AMP
2 AMP
VWR003970-A-03

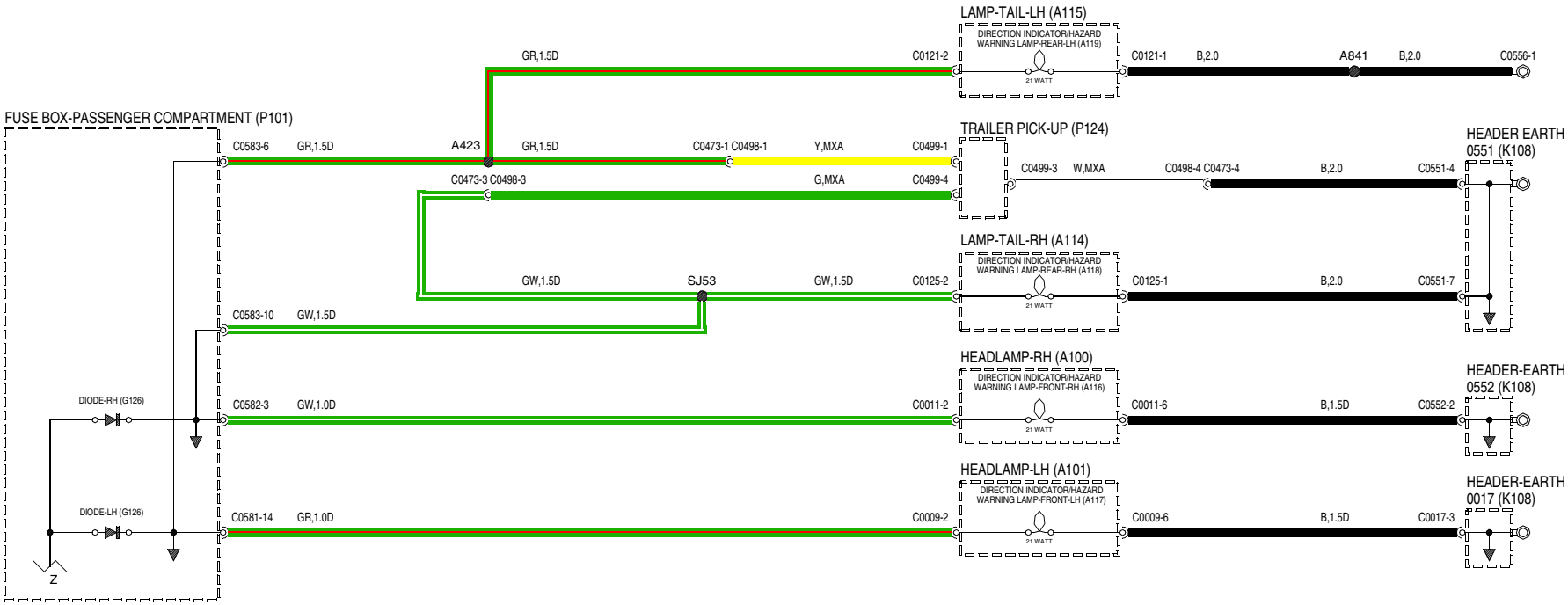

VWR003970-A-04

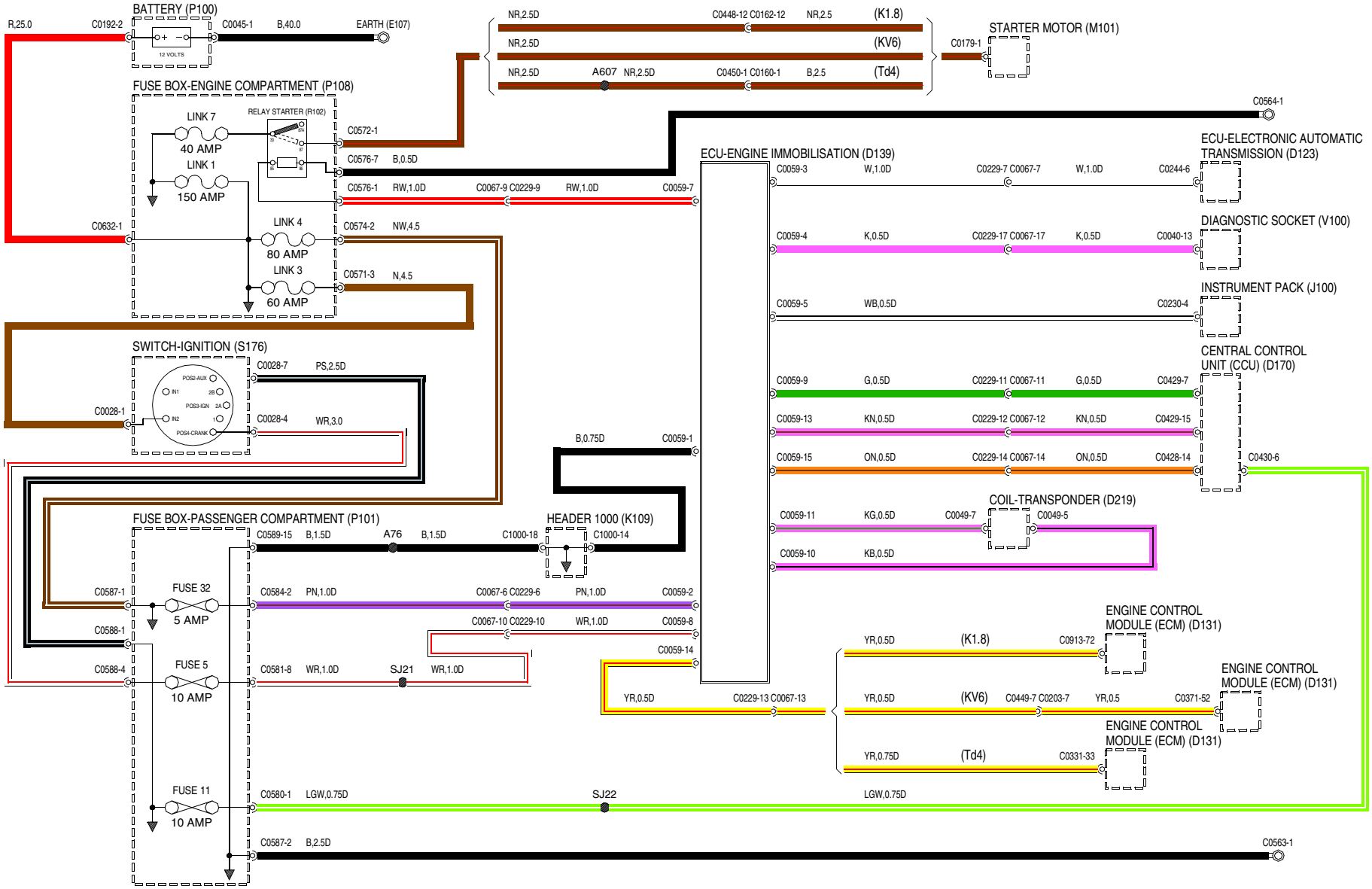
BATTERY (P100)
12 VOLTS
R,25.0
C0192-2
C0045-1
B,40.0
EARTH (E107)
NR,2.5D
C0448-12 C0162-12
NR,2.5
(K1.8)
NR,2.5D
(KV6)
NR,2.5D
A607
NR,2.5D
C0450-1 C0160-1
B,2.5
(Td4)
C0179-1
STARTER MOTOR (M101)
FUSE BOX-ENGINE COMPARTMENT (P108)
LINK 7
40 AMP
RELAY STARTER (R102)
LINK 1
150 AMP
C0572-1
C0576-7
B,0.5D
C0576-1
RW,1.0D
C0067-9 C0229-9
RW,1.0D
C0059-7
C0632-1
LINK 4
80 AMP
C0574-2
NW,4.5
LINK 3
60 AMP
C0571-3
N,4.5
C0564-1
ECU-ENGINE IMMOBILISATION (D139)
ECU-ELECTRONIC AUTOMATIC TRANSMISSION (D123)
C0059-3
W,1.0D
C0229-7 C0067-7
W,1.0D
C0244-6
DIAGNOSTIC SOCKET (V100)
C0059-4
K,0.5D
C0229-17 C0067-17
K,0.5D
C0040-13
INSTRUMENT PACK (J100)
C0059-5
WB,0.5D
C0230-4
SWITCH-IGNITION (S176)
POS2-AUX
IN1
2B
POS3-IGN
2A
IN2
1
POS4-CRANK
C0028-7
PS,2.5D
C0028-1
C0028-4
WR,3.0
CENTRAL CONTROL UNIT (CCU) (D170)
C0059-9
G,0.5D
C0229-11 C0067-11
G,0.5D
C0429-7
C0059-13
KN,0.5D
C0229-12 C0067-12
KN,0.5D
C0429-15
C0059-15
ON,0.5D
C0229-14 C0067-14
ON,0.5D
C0428-14
C0430-6
B,0.75D
C0059-1
COIL-TRANSPONDER (D219)
C0059-11
KG,0.5D
C0049-7
C0049-5
C0059-10
KB,0.5D
FUSE BOX-PASSENGER COMPARTMENT (P101)
HEADER 1000 (K109)
C0589-15
B,1.5D
A76
B,1.5D
C1000-18
C1000-14
C0587-1
FUSE 32
5 AMP
C0584-2
PN,1.0D
C0067-6 C0229-6
PN,1.0D
C0059-2
C0588-1
C0067-10 C0229-10
WR,1.0D
C0059-8
C0588-4
FUSE 5
10 AMP
C0581-8
WR,1.0D
SJ21
WR,1.0D
C0059-14
YR,0.5D
C0229-13 C0067-13
YR,0.5D
(K1.8)
C0913-72
ENGINE CONTROL MODULE (ECM) (D131)
YR,0.5D
(KV6)
C0449-7 C0203-7
YR,0.5
C0371-52
ENGINE CONTROL MODULE (ECM) (D131)
YR,0.75D
(Td4)
C0331-33
ENGINE CONTROL MODULE (ECM) (D131)
FUSE 11
10 AMP
C0580-1
LGW,0.75D
SJ22
LGW,0.75D
C0587-2
B,2.5D
C0563-1
VWR004190-A-01

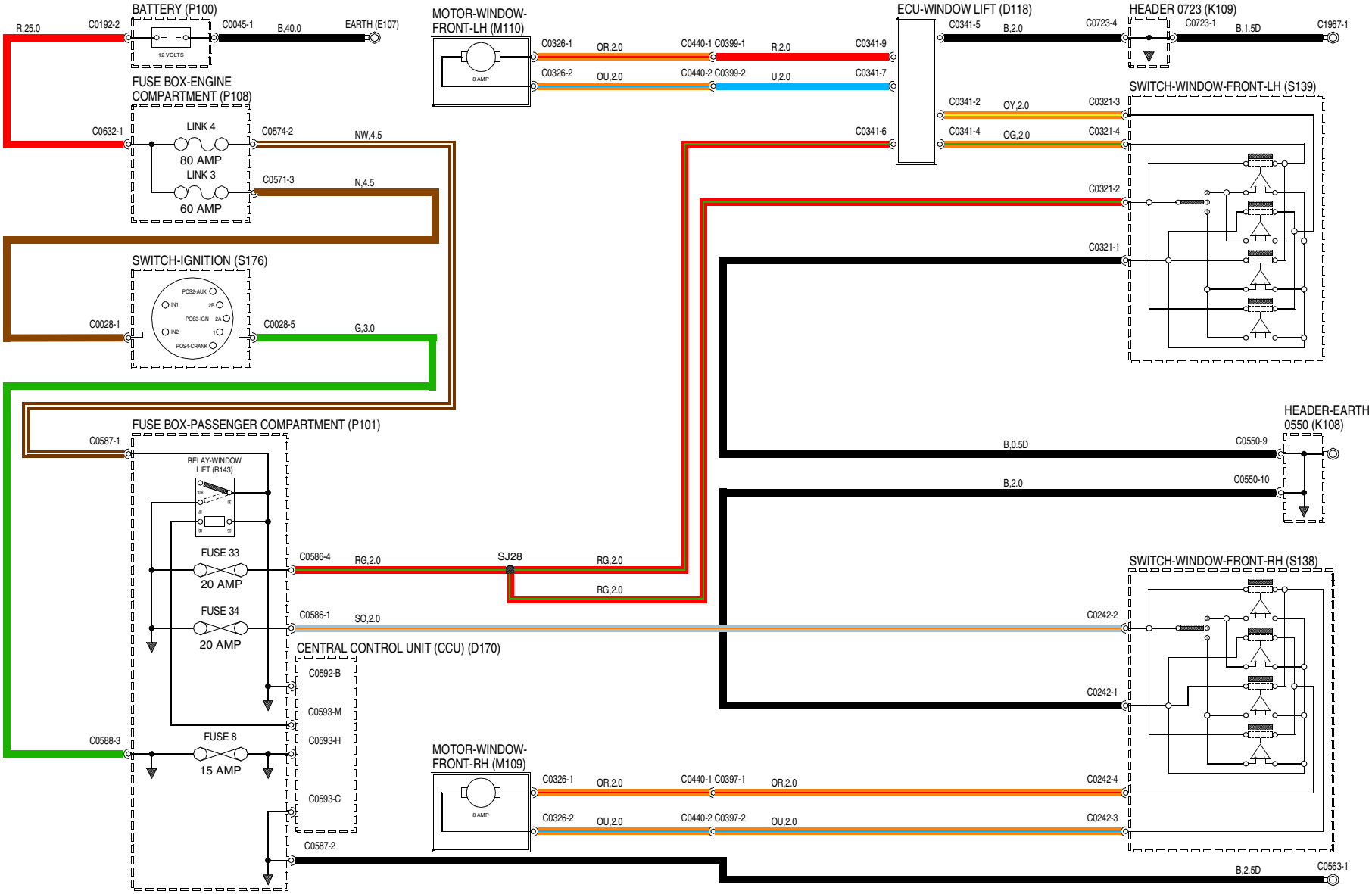

VWR004360-A-01

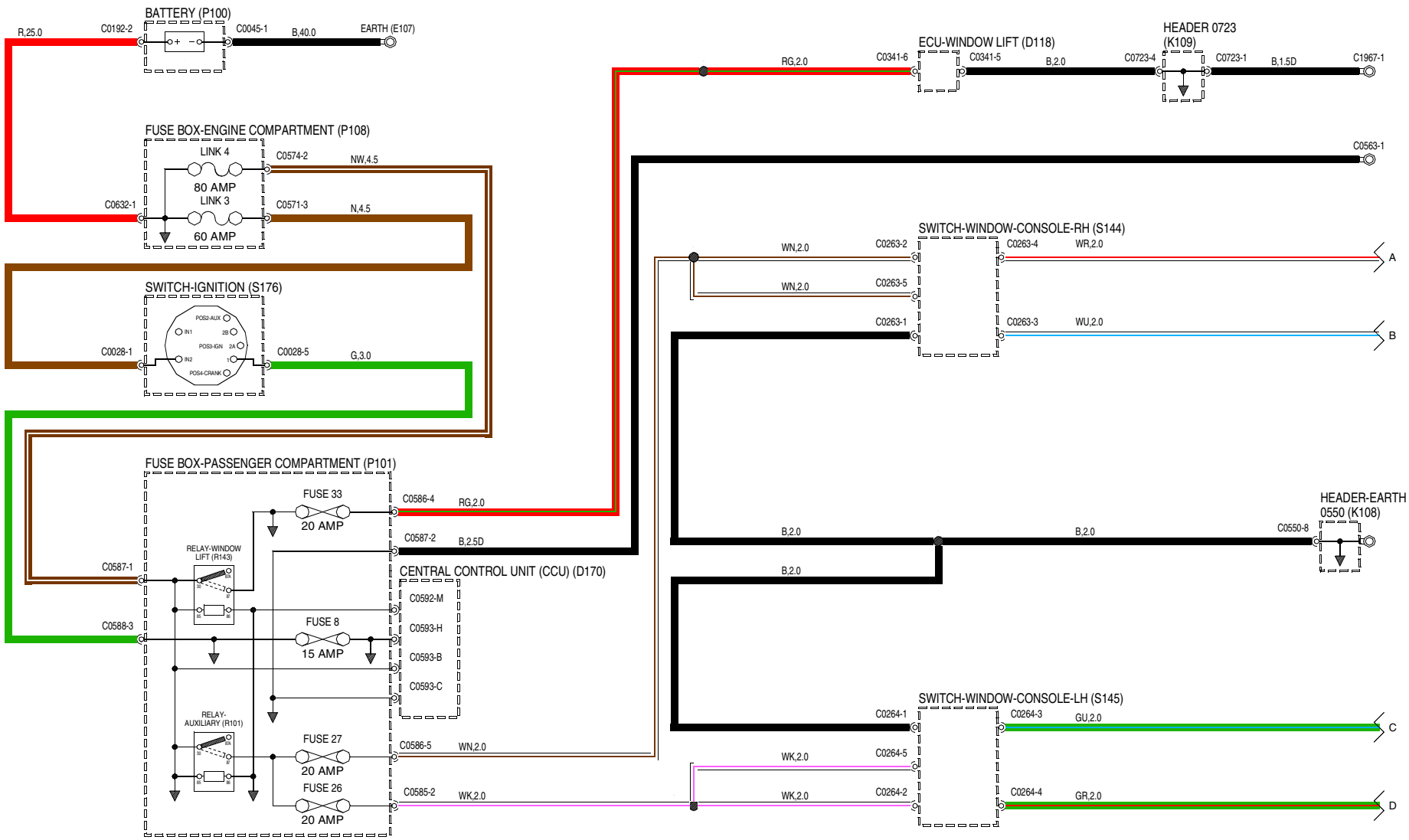

VWR004370-A-01

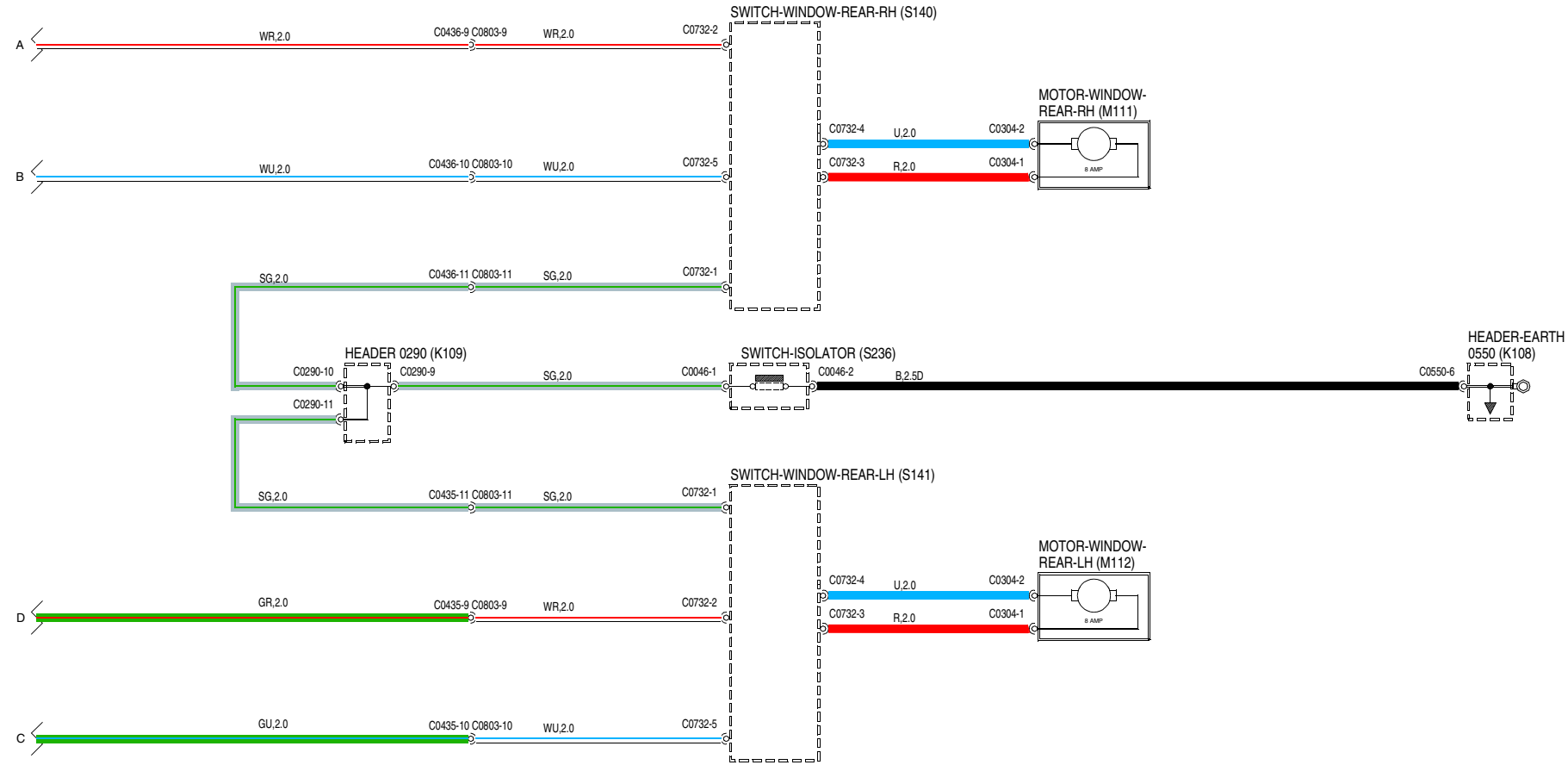

VWR004370-A-02

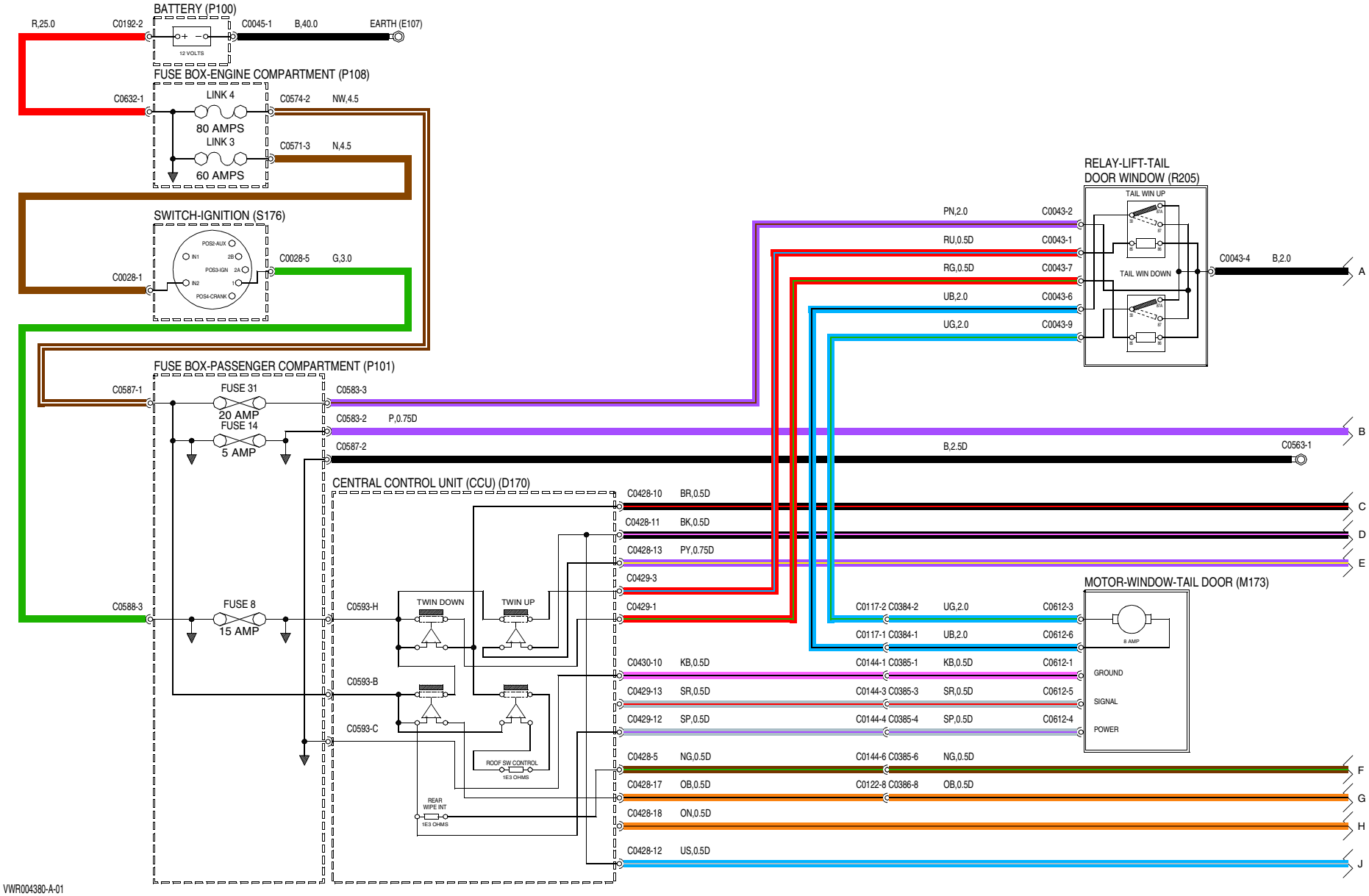
BATTERY (P100)
R,25.0
C0192-2
C0045-1
B,40.0
EARTH (E107)
12 VOLTS
FUSE BOX-ENGINE COMPARTMENT (P108)
C0632-1
LINK 4
80 AMPS
C0574-2
NW,4.5
LINK 3
60 AMPS
C0571-3
N,4.5
SWITCH-IGNITION (S176)
POS2-AUX
IN1
2B
POS3-IGN
2A
IN2
1
POS4-CRANK
C0028-1
C0028-5
G,3.0
FUSE BOX-PASSENGER COMPARTMENT (P101)
C0587-1
FUSE 31
20 AMP
C0583-3
C0583-2
P,0.75D
FUSE 14
5 AMP
C0587-2
B,2.5D
C0563-1
CENTRAL CONTROL UNIT (CCU) (D170)
C0588-3
FUSE 8
15 AMP
C0593-H
TWIN DOWN
TWIN UP
C0593-B
C0593-C
ROOF SW CONTROL
1E3 OHMS
REAR WIPE INT
1E3 OHMS
C0428-10
BR,0.5D
C0428-11
BK,0.5D
C0428-13
PY,0.75D
C0429-3
C0429-1
C0430-10
KB,0.5D
C0429-13
SR,0.5D
C0429-12
SP,0.5D
C0428-5
NG,0.5D
C0428-17
OB,0.5D
C0428-18
ON,0.5D
C0428-12
US,0.5D
RELAY-LIFT-TAIL DOOR WINDOW (R205)
TAIL WIN UP
TAIL WIN DOWN
PN,2.0
C0043-2
RU,0.5D
C0043-1
RG,0.5D
C0043-7
UB,2.0
C0043-6
UG,2.0
C0043-9
C0043-4
B,2.0
MOTOR-WINDOW-TAIL DOOR (M173)
8 AMP
GROUND
SIGNAL
POWER
C0117-2 C0384-2
UG,2.0
C0612-3
C0117-1 C0384-1
UB,2.0
C0612-6
C0144-1 C0385-1
KB,0.5D
C0612-1
C0144-3 C0385-3
SR,0.5D
C0612-5
C0144-4 C0385-4
SP,0.5D
C0612-4
C0144-6 C0385-6
NG,0.5D
C0122-8 C0386-8
OB,0.5D
A
B
C
D
E
F
G
H
J
VWR004380-A-01

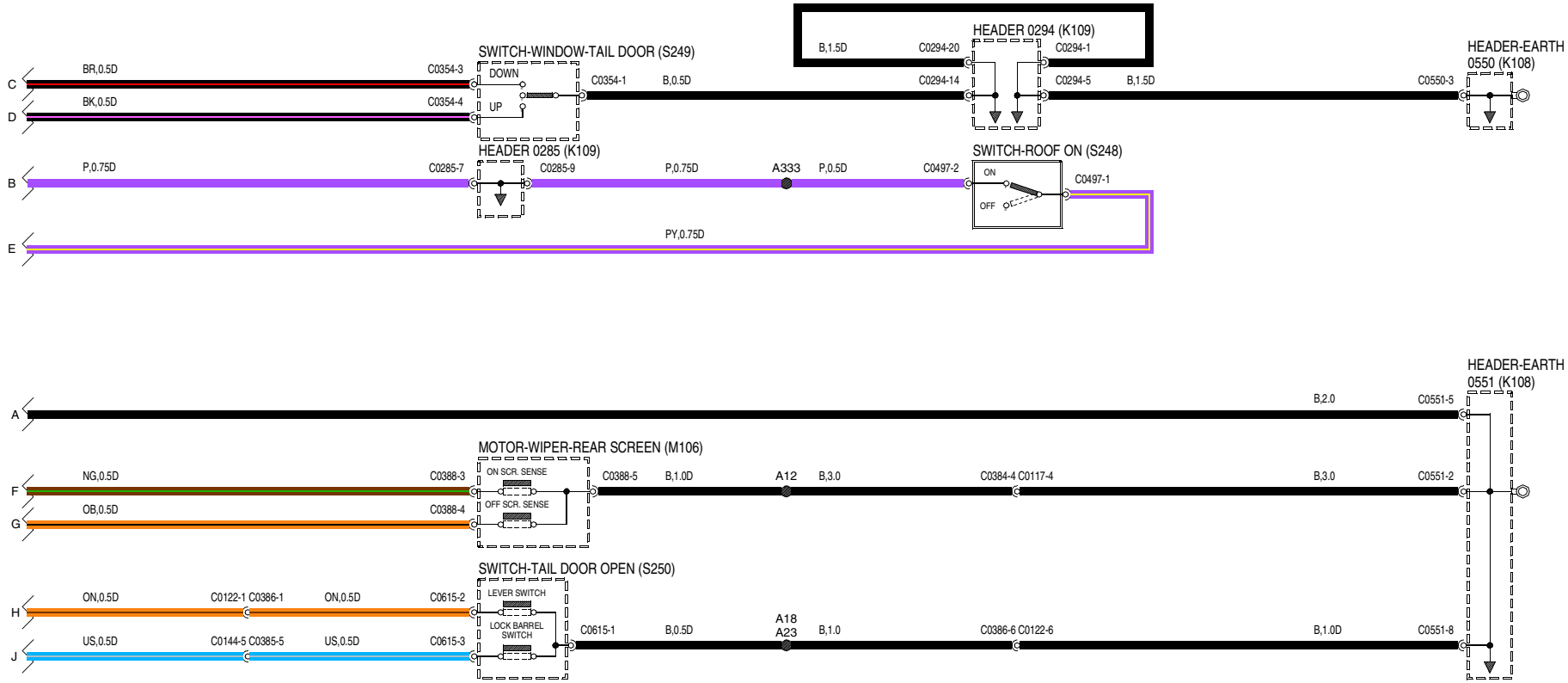

VWR004380-A-02

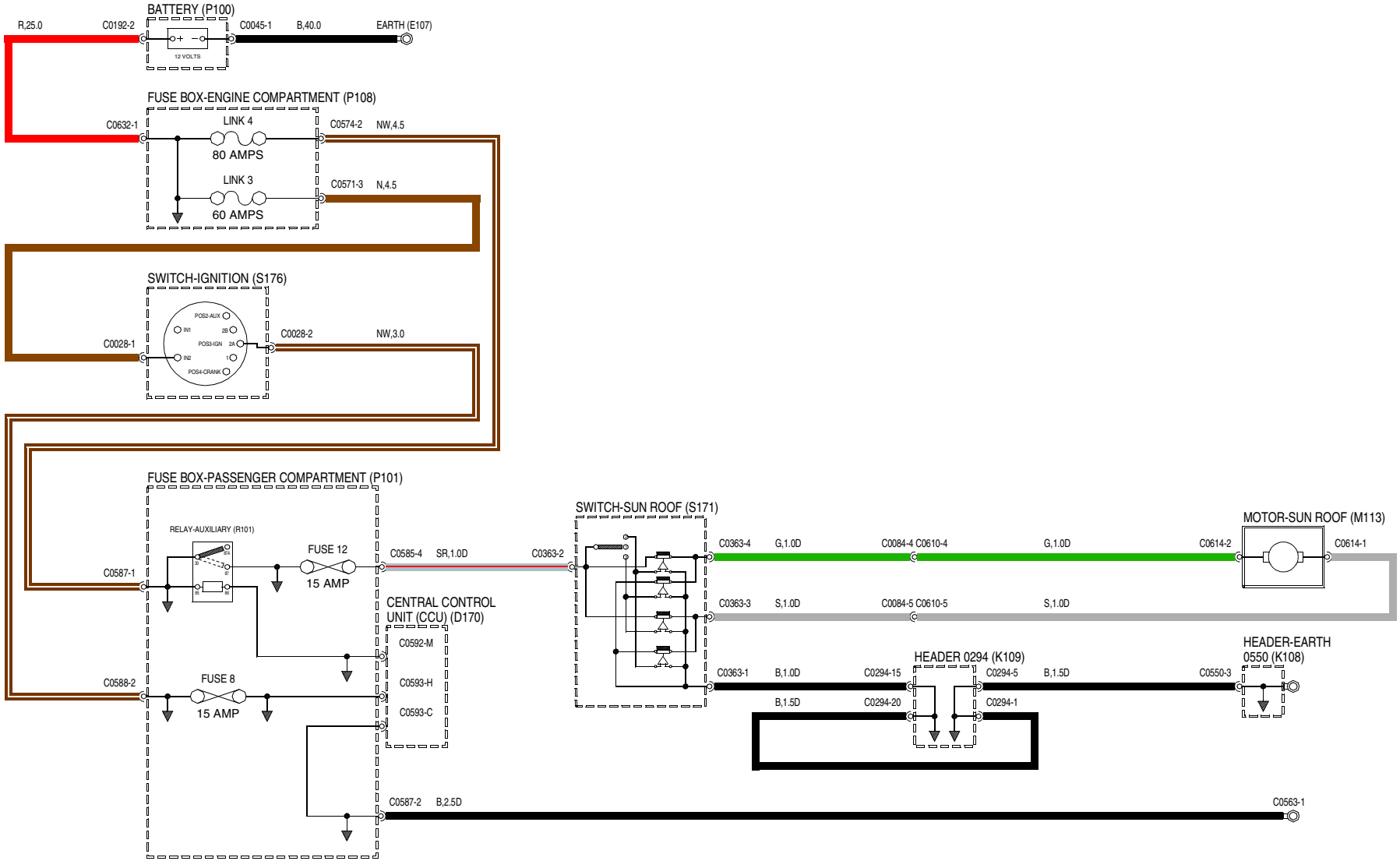

VWR004340-A-01

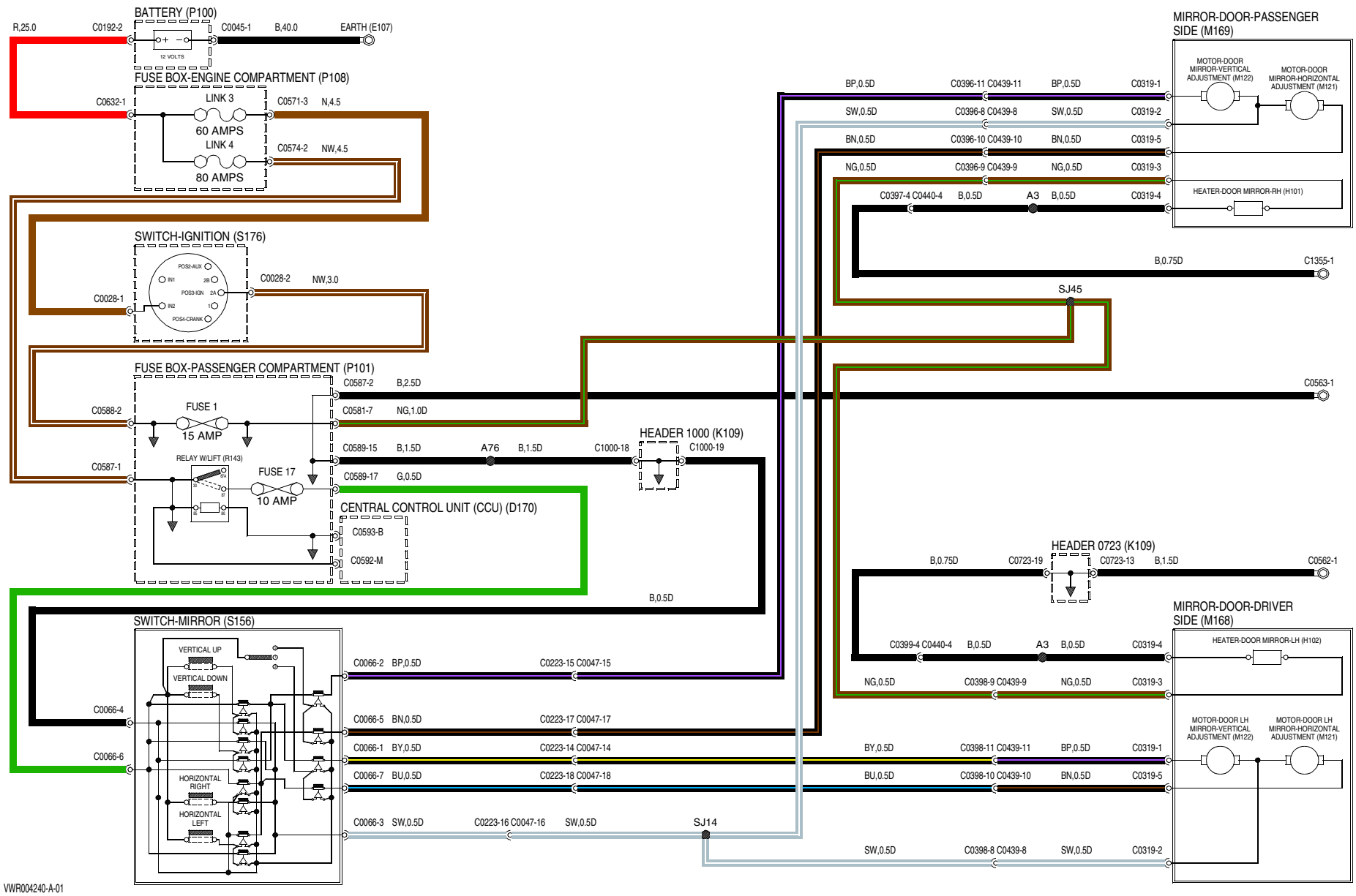
BATTERY (P100)
R,25.0
C0192-2
12 VOLTS
C0045-1
B,40.0
EARTH (E107)
FUSE BOX-ENGINE COMPARTMENT (P108)
C0632-1
LINK 3
60 AMPS
LINK 4
80 AMPS
C0571-3
N,4.5
C0574-2
NW,4.5
SWITCH-IGNITION (S176)
POS2-AUX
IN1
2B
POS3-IGN
2A
IN2
1
POS4-CRANK
C0028-1
C0028-2
NW,3.0
FUSE BOX-PASSENGER COMPARTMENT (P101)
C0588-2
FUSE 1
15 AMP
C0587-1
RELAY W/LIFT (R143)
FUSE 17
10 AMP
C0587-2
B,2.5D
C0581-7
NG,1.0D
C0589-15
B,1.5D
A76
B,1.5D
C1000-18
C1000-19
C0589-17
G,0.5D
CENTRAL CONTROL UNIT (CCU) (D170)
C0593-B
C0592-M
HEADER 1000 (K109)
B,0.5D
SWITCH-MIRROR (S156)
VERTICAL UP
VERTICAL DOWN
HORIZONTAL RIGHT
HORIZONTAL LEFT
C0066-4
C0066-6
C0066-2
BP,0.5D
C0223-15 C0047-15
C0066-5
BN,0.5D
C0223-17 C0047-17
C0066-1
BY,0.5D
C0223-14 C0047-14
C0066-7
BU,0.5D
C0223-18 C0047-18
C0066-3
SW,0.5D
C0223-16 C0047-16
SW,0.5D
SJ14
MIRROR-DOOR-PASSENGER SIDE (M169)
MOTOR-DOOR MIRROR-VERTICAL ADJUSTMENT (M122)
MOTOR-DOOR MIRROR-HORIZONTAL ADJUSTMENT (M121)
HEATER-DOOR MIRROR-RH (H101)
BP,0.5D
C0396-11 C0439-11
BP,0.5D
C0319-1
SW,0.5D
C0396-8 C0439-8
SW,0.5D
C0319-2
BN,0.5D
C0396-10 C0439-10
BN,0.5D
C0319-5
NG,0.5D
C0396-9 C0439-9
NG,0.5D
C0319-3
C0397-4 C0440-4
B,0.5D
A3
B,0.5D
C0319-4
B,0.75D
C1355-1
SJ45
C0563-1
HEADER 0723 (K109)
B,0.75D
C0723-19
C0723-13
B,1.5D
C0562-1
MIRROR-DOOR-DRIVER SIDE (M168)
HEATER-DOOR MIRROR-LH (H102)
C0399-4 C0440-4
B,0.5D
A3
B,0.5D
C0319-4
NG,0.5D
C0398-9 C0439-9
NG,0.5D
C0319-3
MOTOR-DOOR LH MIRROR-VERTICAL ADJUSTMENT (M122)
MOTOR-DOOR LH MIRROR-HORIZONTAL ADJUSTMENT (M121)
BY,0.5D
C0398-11 C0439-11
BP,0.5D
C0319-1
BU,0.5D
C0398-10 C0439-10
BN,0.5D
C0319-5
SW,0.5D
C0398-8 C0439-8
SW,0.5D
C0319-2
VWR004240-A-01

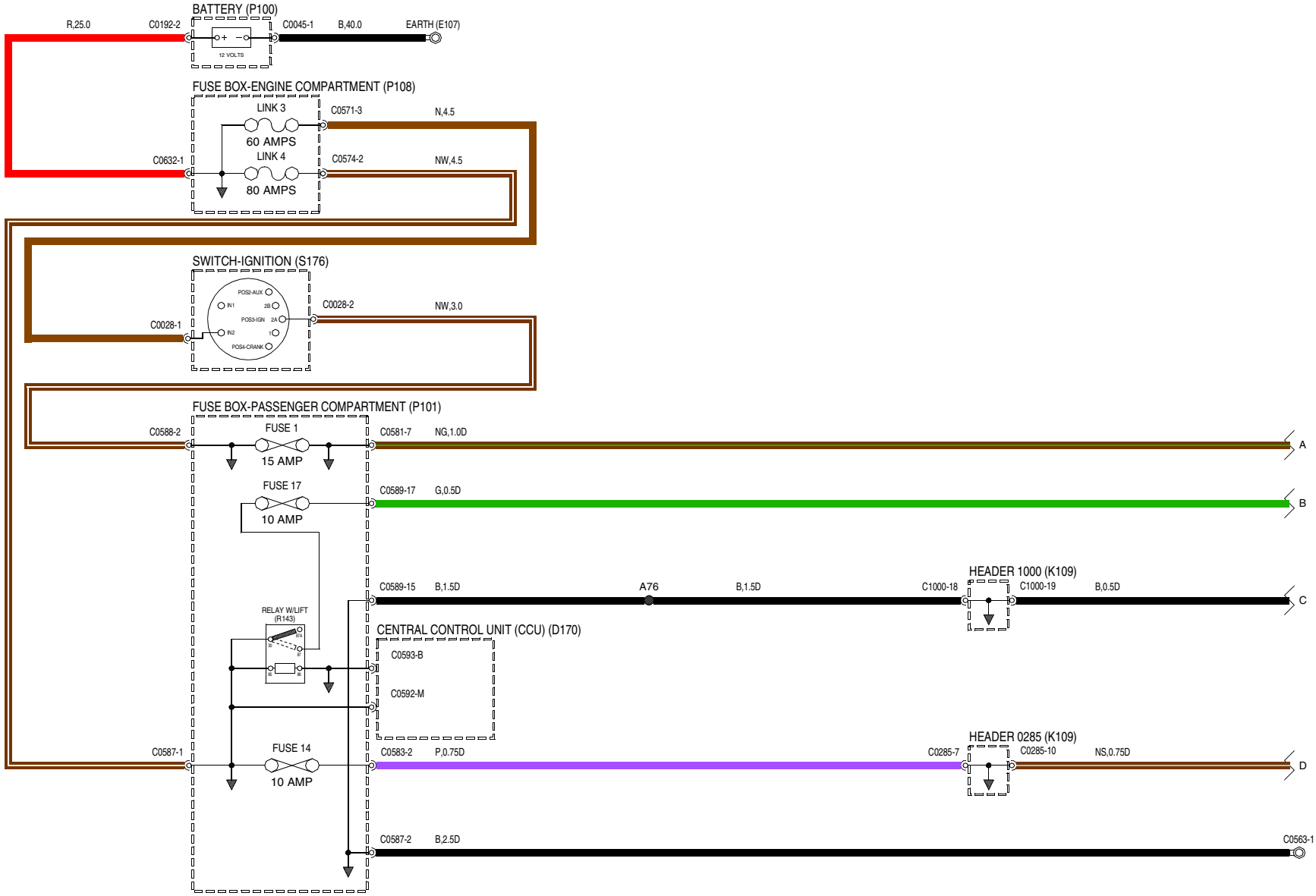

VWR004600-A-01

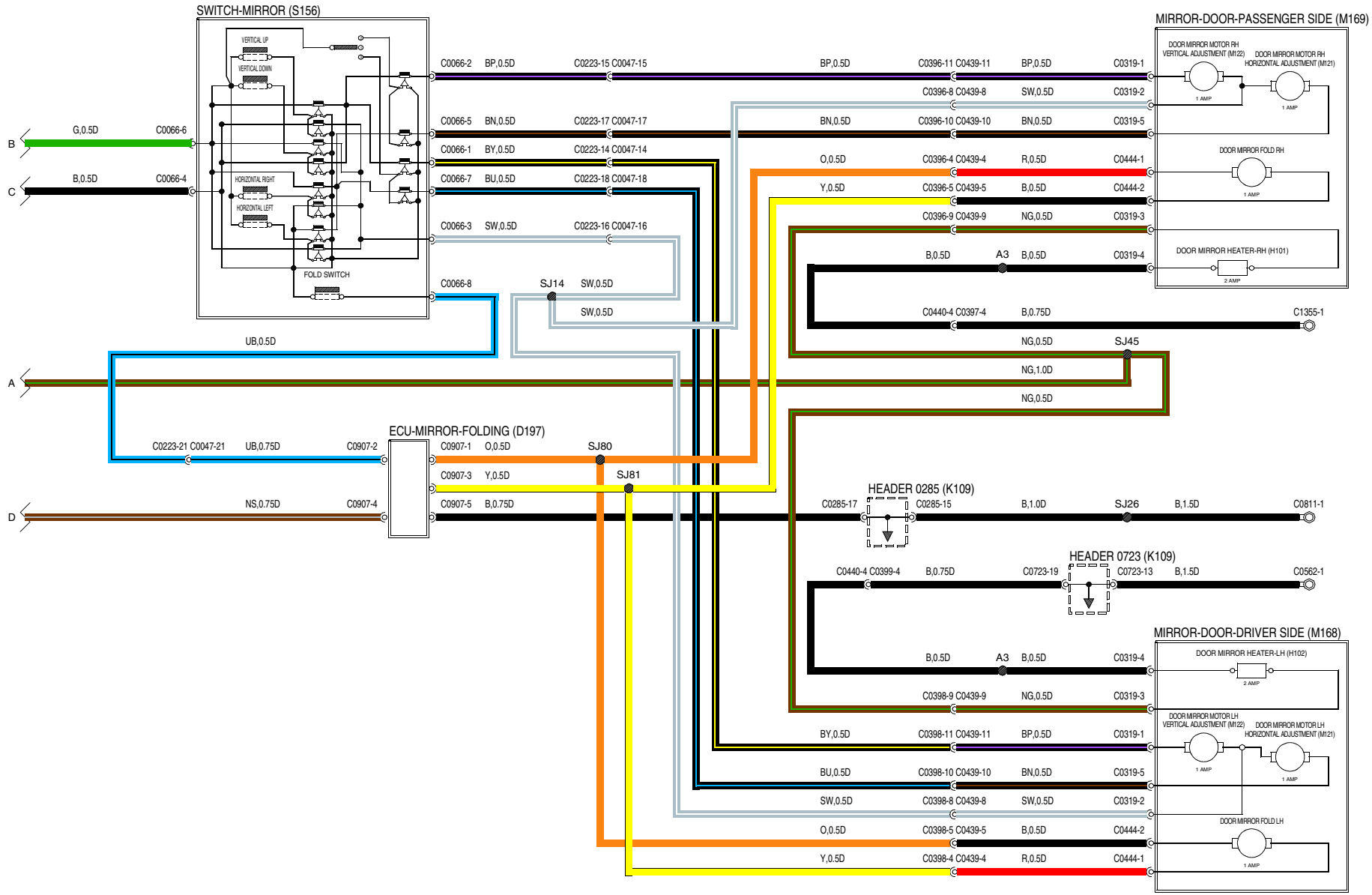

VWR004600-A-02

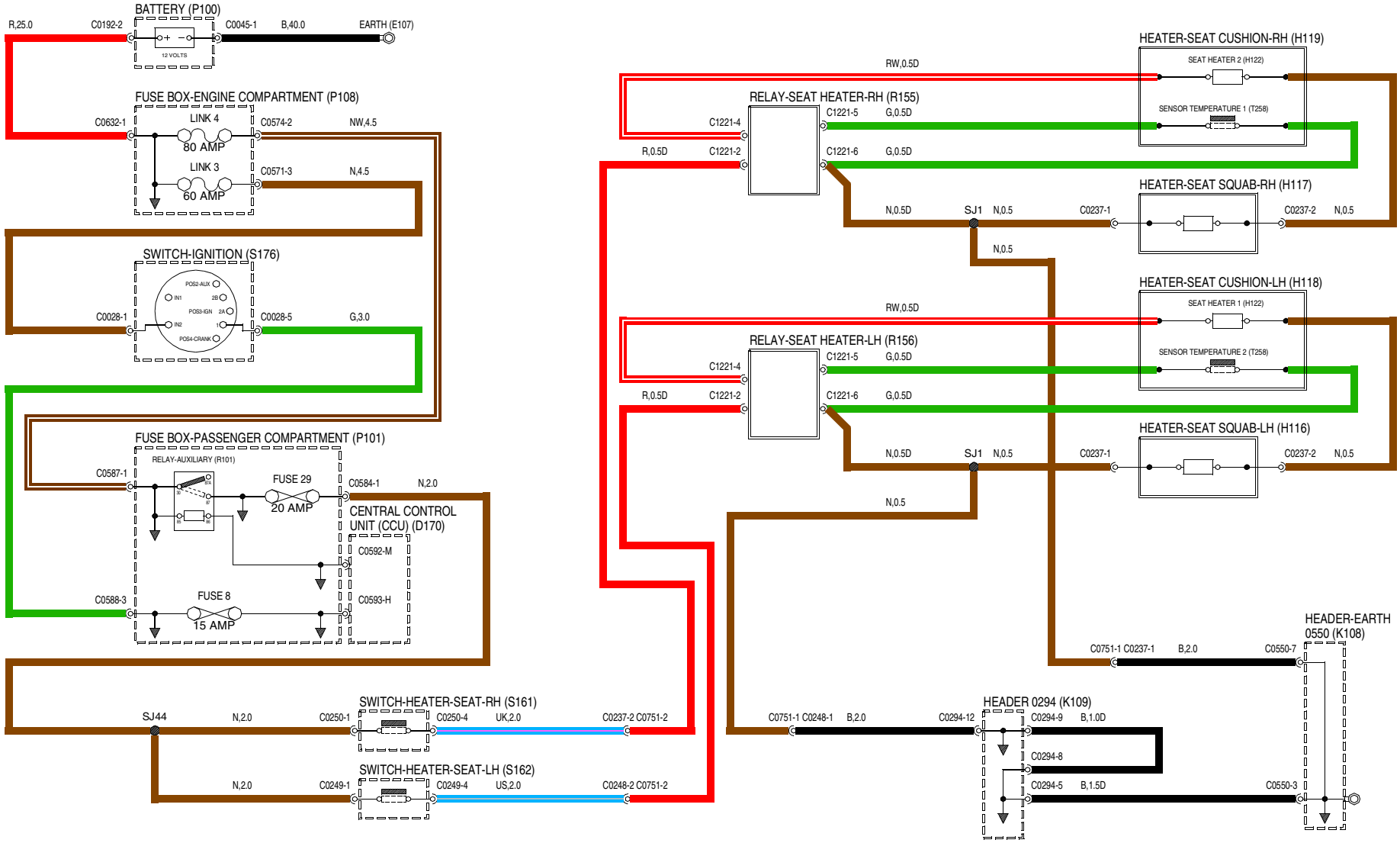
BATTERY (P100)
R,25.0
C0192-2
12 VOLTS
C0045-1
B,40.0
EARTH (E107)
FUSE BOX-ENGINE COMPARTMENT (P108)
C0632-1
LINK 4
80 AMP
C0574-2
NW,4.5
LINK 3
60 AMP
C0571-3
N,4.5
SWITCH-IGNITION (S176)
POS2-AUX
IN1
2B
POS3-IGN
2A
IN2
1
POS4-CRANK
C0028-1
C0028-5
G,3.0
FUSE BOX-PASSENGER COMPARTMENT (P101)
RELAY-AUXILIARY (R101)
C0587-1
FUSE 29
20 AMP
C0584-1
N,2.0
CENTRAL CONTROL
UNIT (CCU) (D170)
C0592-M
C0588-3
FUSE 8
15 AMP
C0593-H
SJ44
N,2.0
C0250-1
SWITCH-HEATER-SEAT-RH (S161)
C0250-4
UK,2.0
C0237-2 C0751-2
N,2.0
C0249-1
SWITCH-HEATER-SEAT-LH (S162)
C0249-4
US,2.0
C0248-2 C0751-2
HEATER-SEAT CUSHION-RH (H119)
SEAT HEATER 2 (H122)
SENSOR TEMPERATURE 1 (T258)
RW,0.5D
RELAY-SEAT HEATER-RH (R155)
C1221-4
C1221-5
G,0.5D
R,0.5D
C1221-2
C1221-6
G,0.5D
HEATER-SEAT SQUAB-RH (H117)
N,0.5D
SJ1
N,0.5
C0237-1
C0237-2
N,0.5
N,0.5
HEATER-SEAT CUSHION-LH (H118)
SEAT HEATER 1 (H122)
SENSOR TEMPERATURE 2 (T258)
RW,0.5D
RELAY-SEAT HEATER-LH (R156)
C1221-4
C1221-5
G,0.5D
R,0.5D
C1221-2
C1221-6
G,0.5D
HEATER-SEAT SQUAB-LH (H116)
N,0.5D
SJ1
N,0.5
C0237-1
C0237-2
N,0.5
N,0.5
HEADER-EARTH
0550 (K108)
C0751-1 C0237-1
B,2.0
C0550-7
C0751-1 C0248-1
B,2.0
C0294-12
HEADER 0294 (K109)
C0294-9
B,1.0D
C0294-8
C0294-5
B,1.5D
C0550-3
VWR004280-A-01

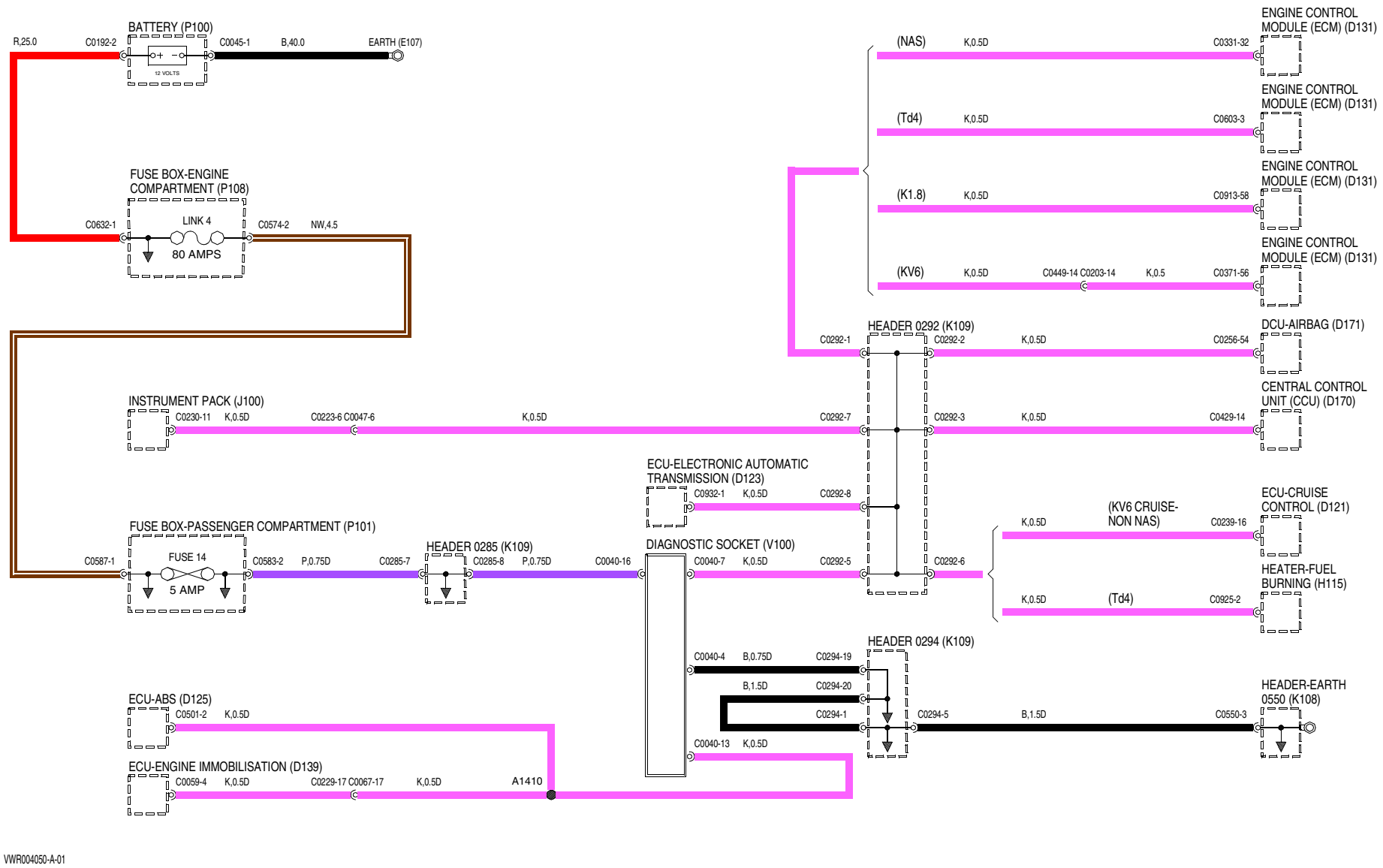
BATTERY (P100)
R,25.0
C0192-2
12 VOLTS
C0045-1
B,40.0
EARTH (E107)
FUSE BOX-ENGINE COMPARTMENT (P108)
C0632-1
LINK 4
80 AMPS
C0574-2
NW,4.5
INSTRUMENT PACK (J100)
C0230-11
K,0.5D
C0223-6 C0047-6
K,0.5D
C0292-7
FUSE BOX-PASSENGER COMPARTMENT (P101)
C0587-1
FUSE 14
5 AMP
C0583-2
P,0.75D
C0285-7
HEADER 0285 (K109)
C0285-8
P,0.75D
C0040-16
ECU-ELECTRONIC AUTOMATIC TRANSMISSION (D123)
C0932-1
K,0.5D
C0292-8
DIAGNOSTIC SOCKET (V100)
C0040-7
K,0.5D
C0292-5
C0040-4
B,0.75D
C0294-19
B,1.5D
C0294-20
C0294-1
C0040-13
K,0.5D
ECU-ABS (D125)
C0501-2
K,0.5D
ECU-ENGINE IMMOBILISATION (D139)
C0059-4
K,0.5D
C0229-17 C0067-17
K,0.5D
A1410
HEADER 0292 (K109)
C0292-1
C0292-2
K,0.5D
C0292-3
K,0.5D
C0292-6
HEADER 0294 (K109)
C0294-5
B,1.5D
(NAS)
K,0.5D
C0331-32
ENGINE CONTROL MODULE (ECM) (D131)
(Td4)
K,0.5D
C0603-3
ENGINE CONTROL MODULE (ECM) (D131)
(K1.8)
K,0.5D
C0913-58
ENGINE CONTROL MODULE (ECM) (D131)
(KV6)
K,0.5D
C0449-14 C0203-14
K,0.5
C0371-56
ENGINE CONTROL MODULE (ECM) (D131)
C0256-54
DCU-AIRBAG (D171)
C0429-14
CENTRAL CONTROL UNIT (CCU) (D170)
K,0.5D
(KV6 CRUISE-NON NAS)
C0239-16
ECU-CRUISE CONTROL (D121)
K,0.5D
(Td4)
C0925-2
HEATER-FUEL BURNING (H115)
C0550-3
HEADER-EARTH 0550 (K108)
VWR004050-A-01

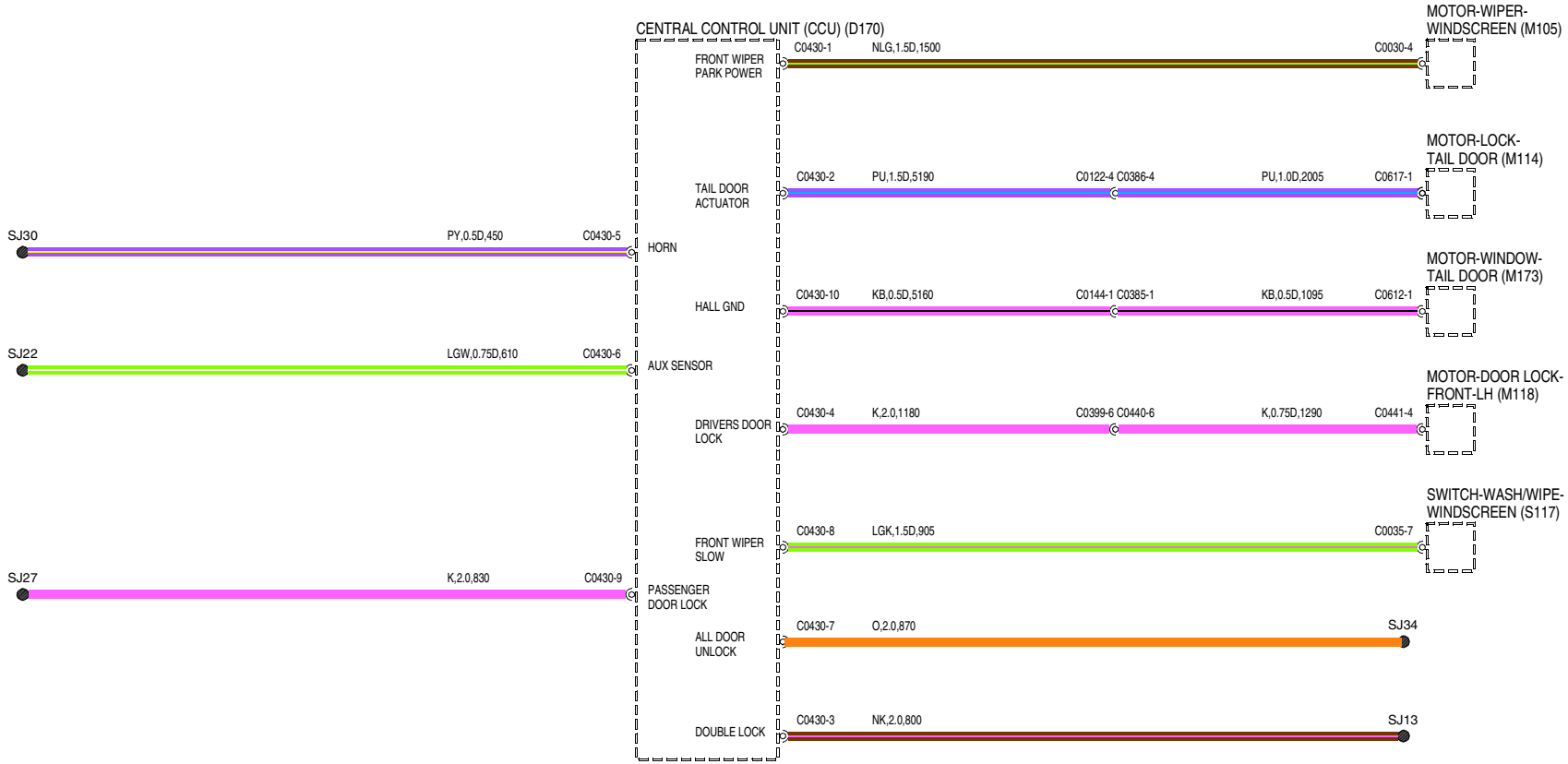

VWR004010-A-01

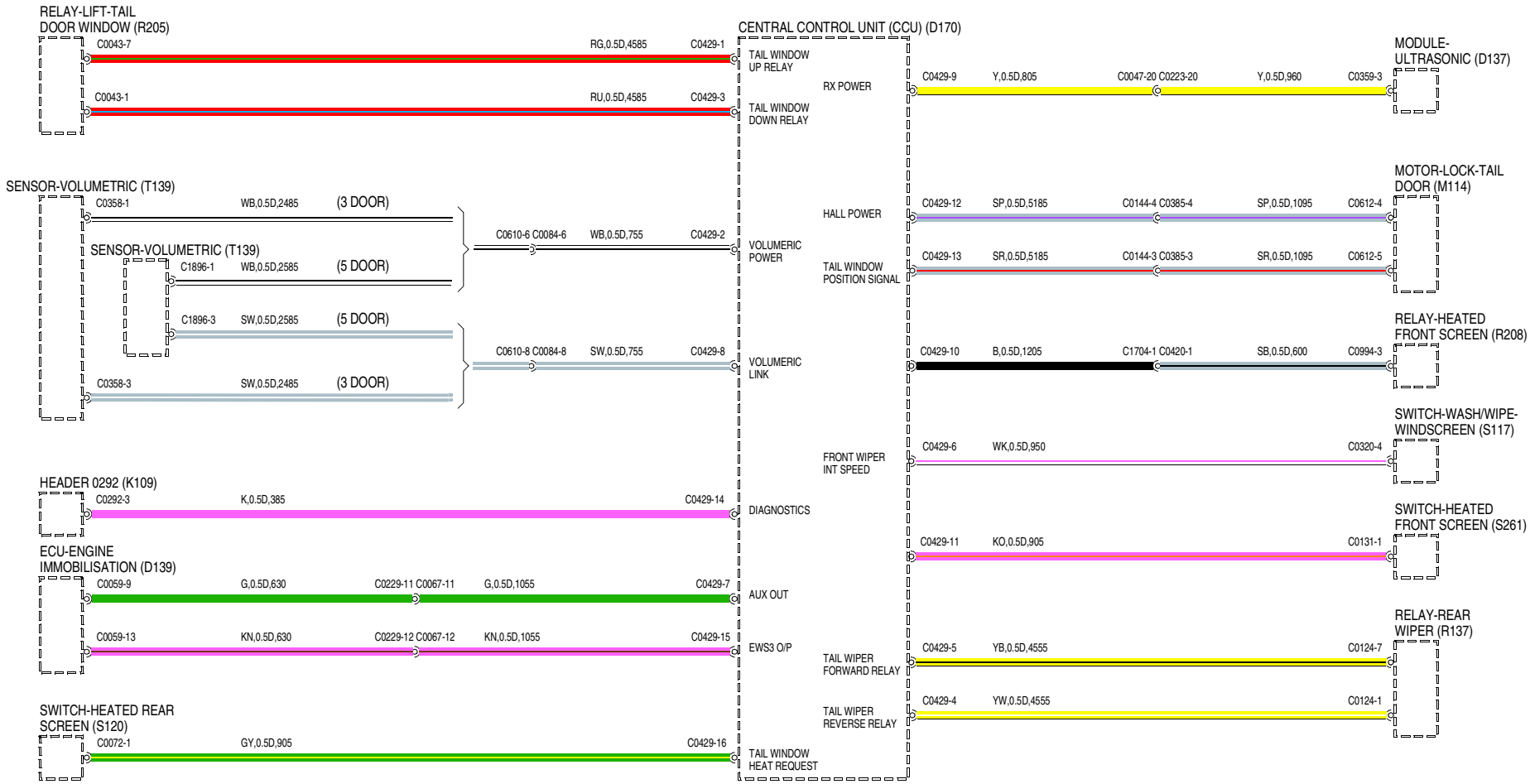

VWR004010-A-02

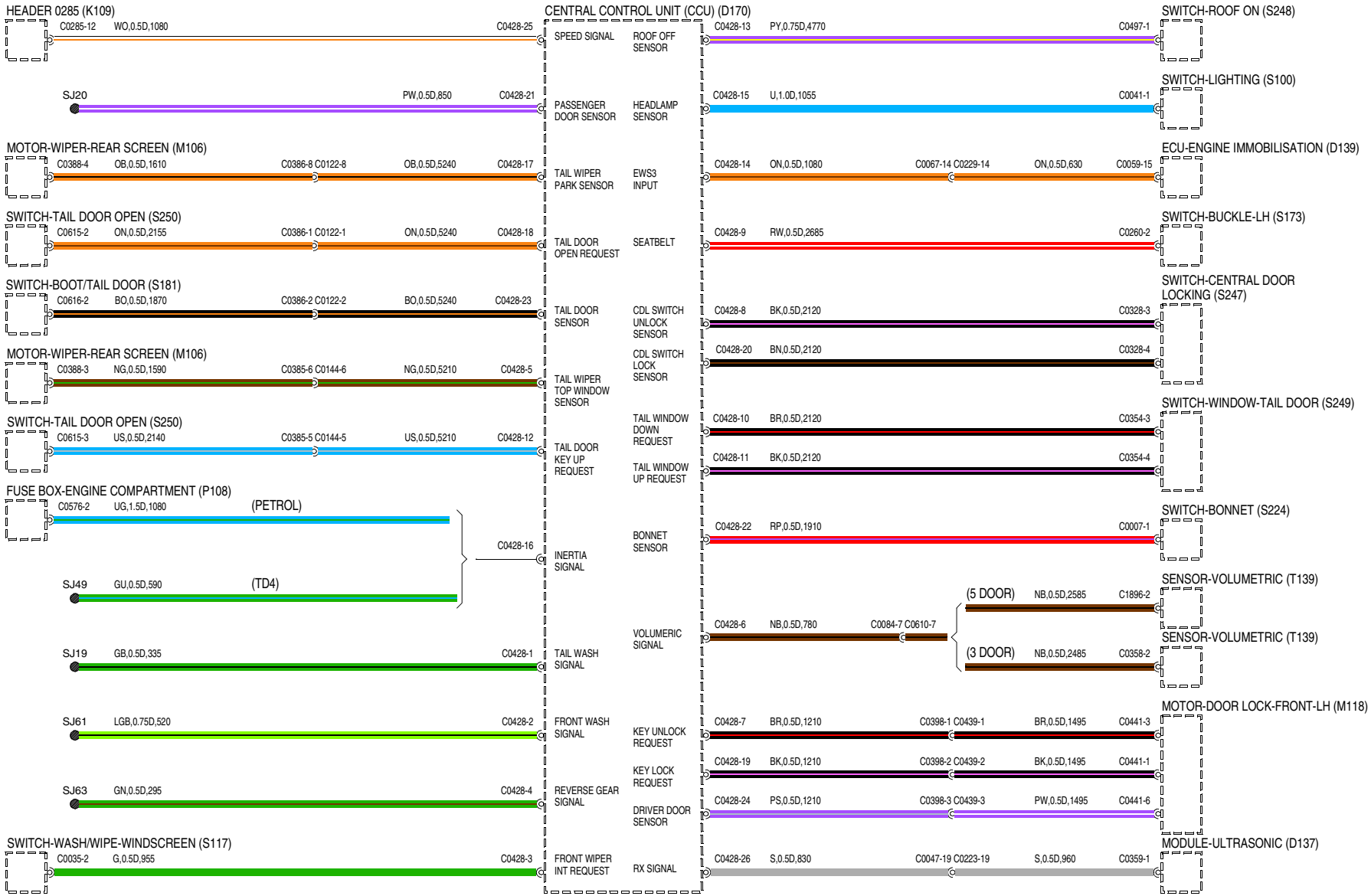
HEADER 0285 (K109)
C0285-12 WO,0.5D,1080 C0428-25
SJ20 PW,0.5D,850 C0428-21
MOTOR-WIPER-REAR SCREEN (M106)
C0388-4 OB,0.5D,1610 C0386-8 C0122-8 OB,0.5D,5240 C0428-17
SWITCH-TAIL DOOR OPEN (S250)
C0615-2 ON,0.5D,2155 C0386-1 C0122-1 ON,0.5D,5240 C0428-18
SWITCH-BOOT/TAIL DOOR (S181)
C0616-2 BO,0.5D,1870 C0386-2 C0122-2 BO,0.5D,5240 C0428-23
MOTOR-WIPER-REAR SCREEN (M106)
C0388-3 NG,0.5D,1590 C0385-6 C0144-6 NG,0.5D,5210 C0428-5
SWITCH-TAIL DOOR OPEN (S250)
C0615-3 US,0.5D,2140 C0385-5 C0144-5 US,0.5D,5210 C0428-12
FUSE BOX-ENGINE COMPARTMENT (P108)
C0576-2 UG,1.5D,1080 (PETROL)
C0428-16
SJ49 GU,0.5D,590 (TD4)
SJ19 GB,0.5D,335 C0428-1
SJ61 LGB,0.75D,520 C0428-2
SJ63 GN,0.5D,295 C0428-4
SWITCH-WASH/WIPE-WINDSCREEN (S117)
C0035-2 G,0.5D,955 C0428-3
CENTRAL CONTROL UNIT (CCU) (D170)
SPEED SIGNAL
PASSENGER DOOR SENSOR
TAIL WIPER PARK SENSOR
TAIL DOOR OPEN REQUEST
TAIL DOOR SENSOR
TAIL WIPER TOP WINDOW SENSOR
TAIL DOOR KEY UP REQUEST
INERTIA SIGNAL
TAIL WASH SIGNAL
FRONT WASH SIGNAL
REVERSE GEAR SIGNAL
FRONT WIPER INT REQUEST
ROOF OFF SENSOR
HEADLAMP SENSOR
EWS3 INPUT
SEATBELT
CDL SWITCH UNLOCK SENSOR
CDL SWITCH LOCK SENSOR
TAIL WINDOW DOWN REQUEST
TAIL WINDOW UP REQUEST
BONNET SENSOR
VOLUMERIC SIGNAL
KEY UNLOCK REQUEST
KEY LOCK REQUEST
DRIVER DOOR SENSOR
RX SIGNAL
C0428-13 PY,0.75D,4770 C0497-1
SWITCH-ROOF ON (S248)
C0428-15 U,1.0D,1055 C0041-1
SWITCH-LIGHTING (S100)
C0428-14 ON,0.5D,1080 C0067-14 C0229-14 ON,0.5D,630 C0059-15
ECU-ENGINE IMMOBILISATION (D139)
C0428-9 RW,0.5D,2685 C0260-2
SWITCH-BUCKLE-LH (S173)
C0428-8 BK,0.5D,2120 C0328-3
C0428-20 BN,0.5D,2120 C0328-4
SWITCH-CENTRAL DOOR LOCKING (S247)
C0428-10 BR,0.5D,2120 C0354-3
C0428-11 BK,0.5D,2120 C0354-4
SWITCH-WINDOW-TAIL DOOR (S249)
C0428-22 RP,0.5D,1910 C0007-1
SWITCH-BONNET (S224)
C0428-6 NB,0.5D,780 C0084-7 C0610-7
(5 DOOR) NB,0.5D,2585 C1896-2
SENSOR-VOLUMETRIC (T139)
(3 DOOR) NB,0.5D,2485 C0358-2
SENSOR-VOLUMETRIC (T139)
C0428-7 BR,0.5D,1210 C0398-1 C0439-1 BR,0.5D,1495 C0441-3
C0428-19 BK,0.5D,1210 C0398-2 C0439-2 BK,0.5D,1495 C0441-1
C0428-24 PS,0.5D,1210 C0398-3 C0439-3 PW,0.5D,1495 C0441-6
MOTOR-DOOR LOCK-FRONT-LH (M118)
C0428-26 S,0.5D,830 C0047-19 C0223-19 S,0.5D,960 C0359-1
MODULE-ULTRASONIC (D137)
VWR004010-A-03

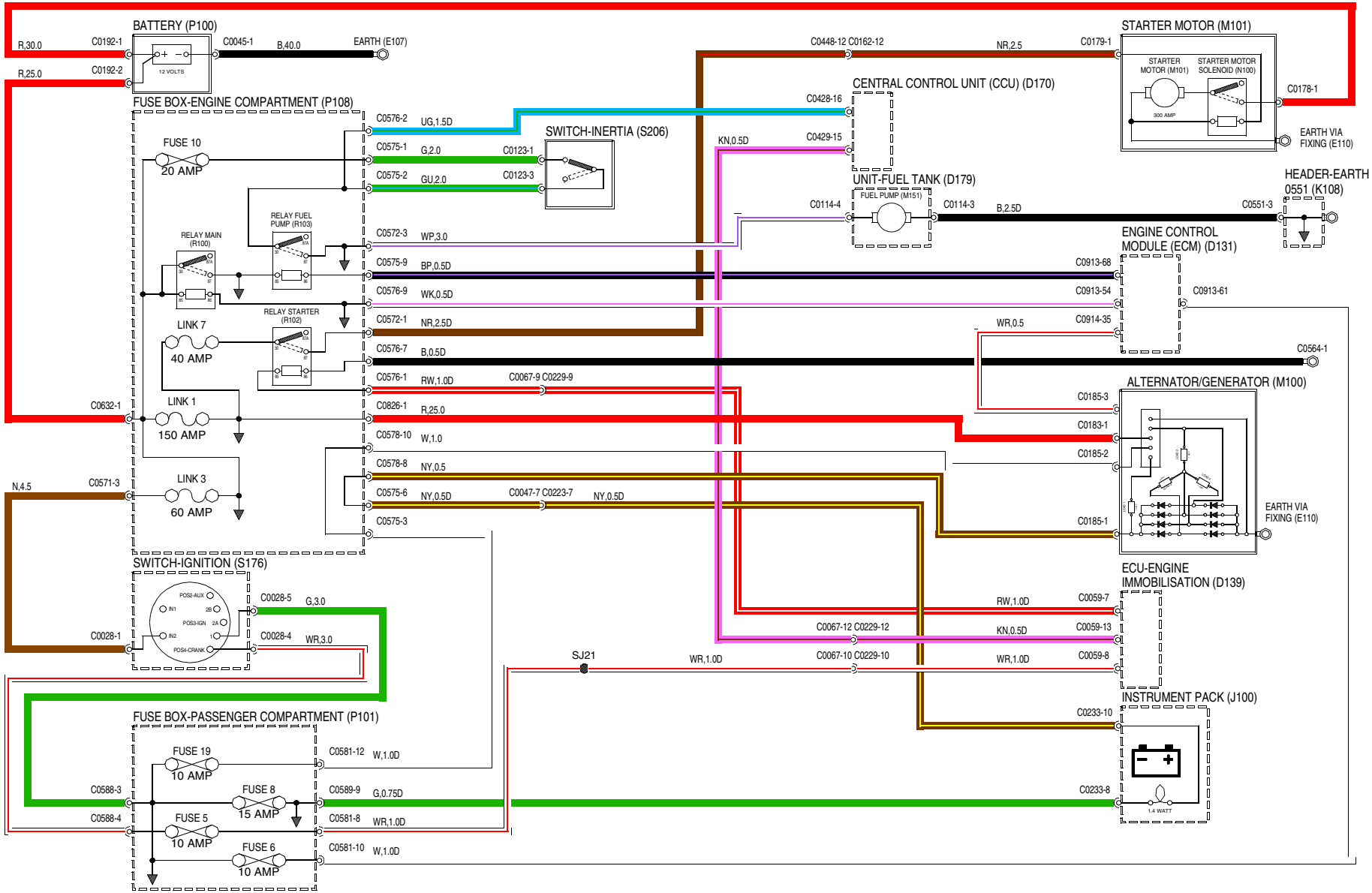

VWR004310-A-01

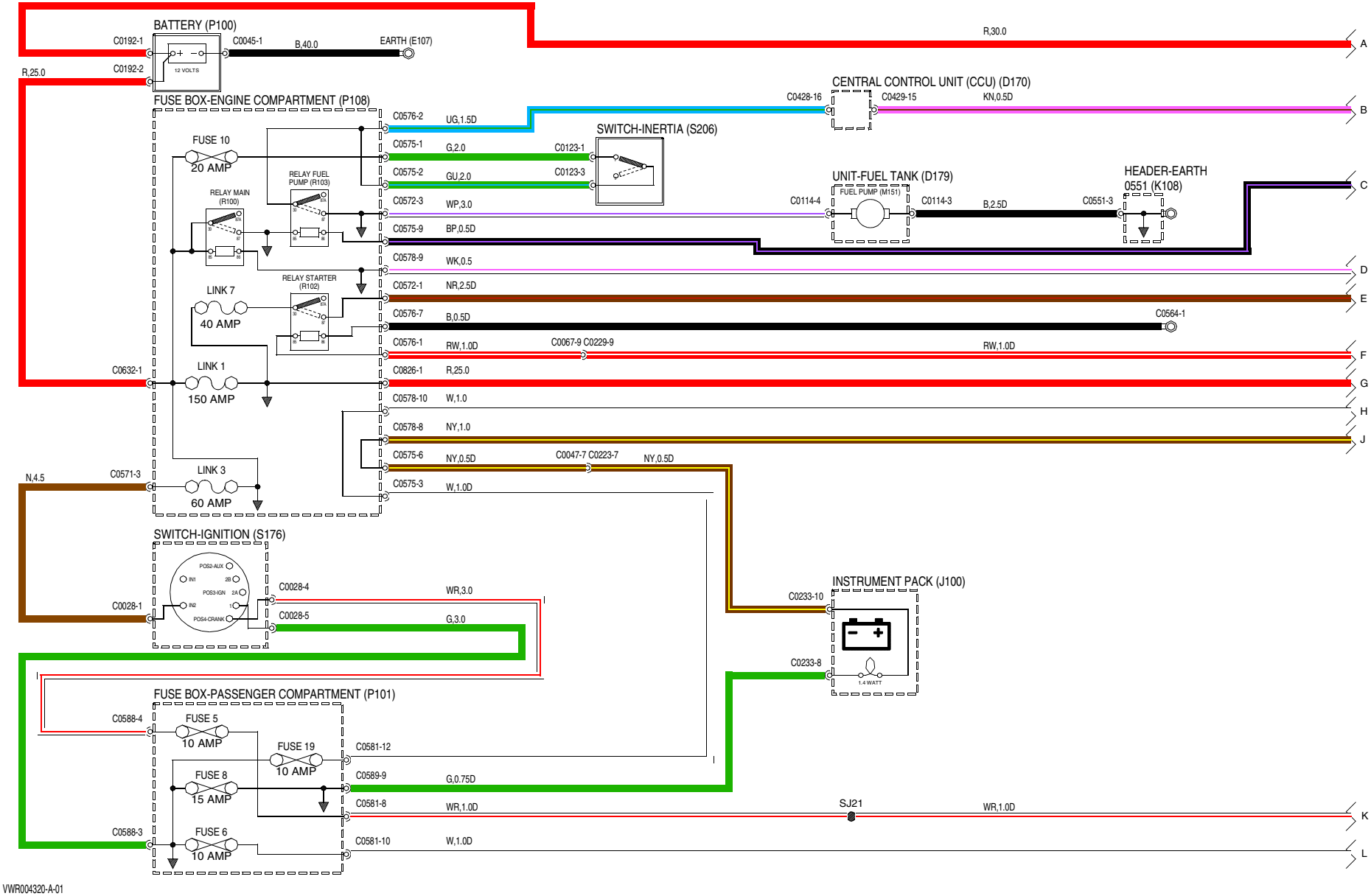
BATTERY (P100)
C0192-1
C0192-2
12 VOLTS
C0045-1
B,40.0
EARTH (E107)
R,25.0
R,30.0
A
CENTRAL CONTROL UNIT (CCU) (D170)
C0428-16
C0429-15
KN,0.5D
B
FUSE BOX-ENGINE COMPARTMENT (P108)
C0576-2
UG,1.5D
SWITCH-INERTIA (S206)
FUSE 10
20 AMP
C0575-1
G,2.0
C0123-1
C0575-2
GU,2.0
C0123-3
RELAY FUEL PUMP (R103)
RELAY MAIN (R100)
UNIT-FUEL TANK (D179)
FUEL PUMP (M151)
HEADER-EARTH 0551 (K108)
C
C0572-3
WP,3.0
C0114-4
C0114-3
B,2.5D
C0551-3
C0575-9
BP,0.5D
C0578-9
WK,0.5
D
RELAY STARTER (R102)
LINK 7
40 AMP
C0572-1
NR,2.5D
E
C0576-7
B,0.5D
C0564-1
C0576-1
RW,1.0D
C0067-9 C0229-9
RW,1.0D
F
C0632-1
LINK 1
150 AMP
C0826-1
R,25.0
G
C0578-10
W,1.0
H
C0578-8
NY,1.0
J
C0575-6
NY,0.5D
C0047-7 C0223-7
NY,0.5D
N,4.5
C0571-3
LINK 3
60 AMP
C0575-3
W,1.0D
SWITCH-IGNITION (S176)
POS2-AUX
IN1
2B
POS3-IGN
2A
IN2
1
POS4-CRANK
C0028-4
WR,3.0
C0028-1
C0028-5
G,3.0
INSTRUMENT PACK (J100)
C0233-10
C0233-8
1.4 WATT
FUSE BOX-PASSENGER COMPARTMENT (P101)
C0588-4
FUSE 5
10 AMP
FUSE 19
10 AMP
C0581-12
FUSE 8
15 AMP
C0589-9
G,0.75D
C0581-8
WR,1.0D
SJ21
WR,1.0D
K
C0588-3
FUSE 6
10 AMP
C0581-10
W,1.0D
L
VWR004320-A-01

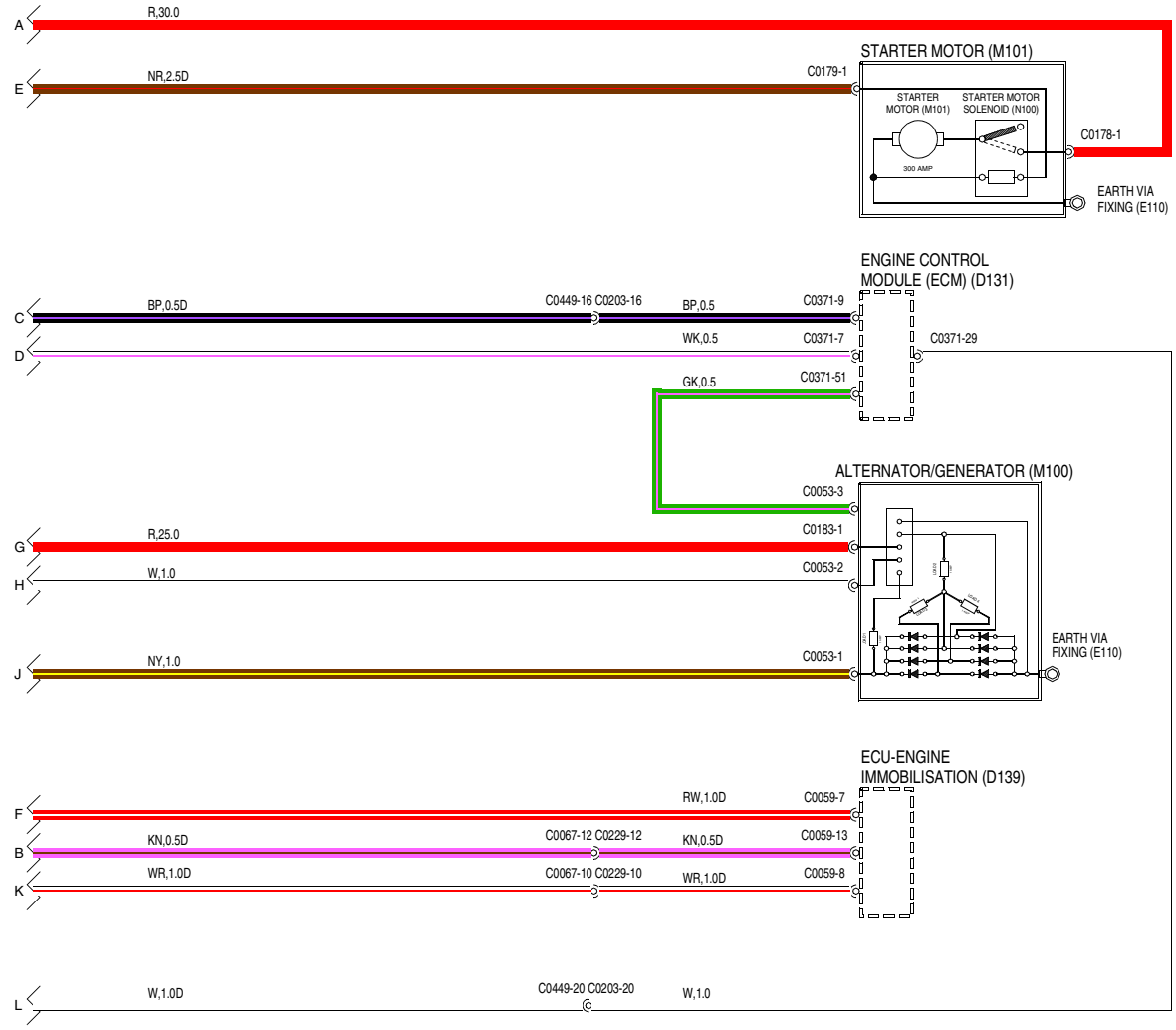

VWR004320-A-02

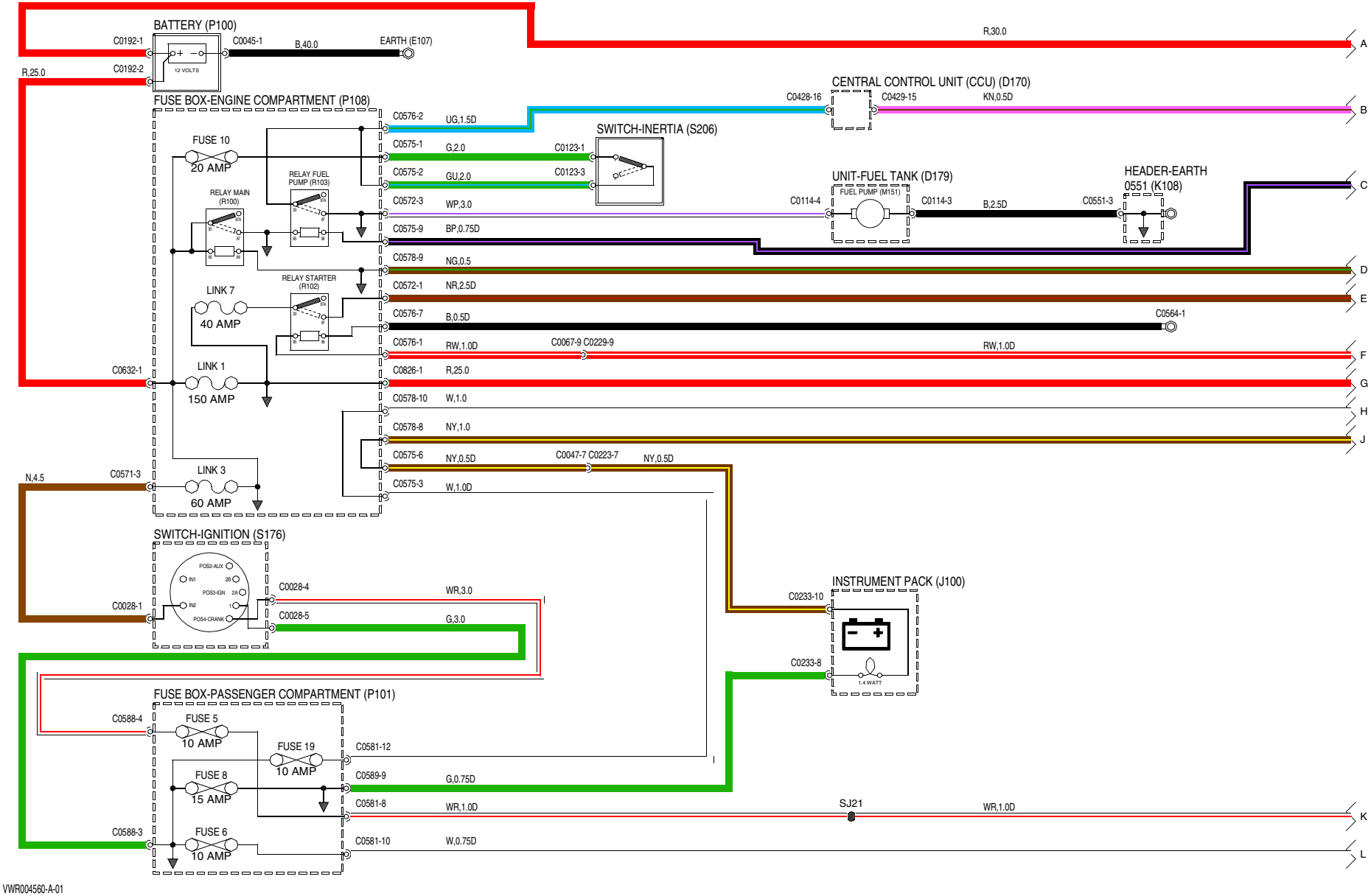
BATTERY (P100)
C0192-1
C0192-2
12 VOLTS
C0045-1
B,40.0
EARTH (E107)
R,25.0
R,30.0
A
CENTRAL CONTROL UNIT (CCU) (D170)
C0428-16
C0429-15
KN,0.5D
B
FUSE BOX-ENGINE COMPARTMENT (P108)
C0576-2
UG,1.5D
SWITCH-INERTIA (S206)
FUSE 10
20 AMP
C0575-1
G,2.0
C0123-1
C0575-2
GU,2.0
C0123-3
RELAY FUEL PUMP (R103)
RELAY MAIN (R100)
UNIT-FUEL TANK (D179)
FUEL PUMP (M151)
HEADER-EARTH 0551 (K108)
C
C0572-3
WP,3.0
C0114-4
C0114-3
B,2.5D
C0551-3
C0575-9
BP,0.75D
C0578-9
NG,0.5
D
RELAY STARTER (R102)
LINK 7
40 AMP
C0572-1
NR,2.5D
E
C0576-7
B,0.5D
C0564-1
C0576-1
RW,1.0D
C0067-9 C0229-9
RW,1.0D
F
C0632-1
LINK 1
150 AMP
C0826-1
R,25.0
G
C0578-10
W,1.0
H
C0578-8
NY,1.0
J
C0575-6
NY,0.5D
C0047-7 C0223-7
NY,0.5D
N,4.5
C0571-3
LINK 3
60 AMP
C0575-3
W,1.0D
SWITCH-IGNITION (S176)
POS2-AUX
IN1
2B
POS3-IGN
2A
IN2
1
POS4-CRANK
C0028-4
WR,3.0
C0028-1
C0028-5
G,3.0
INSTRUMENT PACK (J100)
C0233-10
C0233-8
1.4 WATT
FUSE BOX-PASSENGER COMPARTMENT (P101)
C0588-4
FUSE 5
10 AMP
FUSE 19
10 AMP
C0581-12
FUSE 8
15 AMP
C0589-9
G,0.75D
C0581-8
WR,1.0D
SJ21
WR,1.0D
K
C0588-3
FUSE 6
10 AMP
C0581-10
W,0.75D
L
VWR004560-A-01

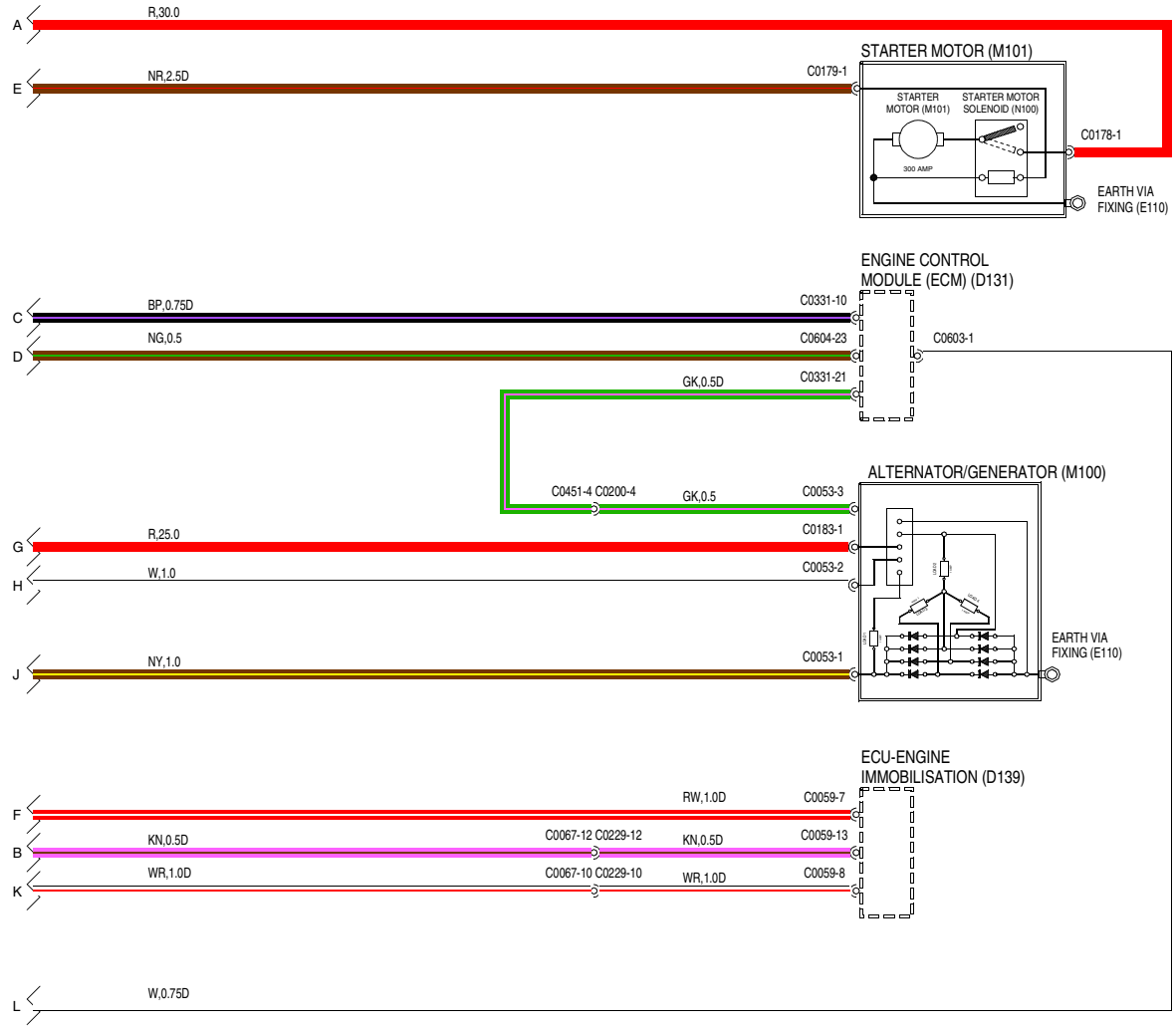

VWR004560-A-02

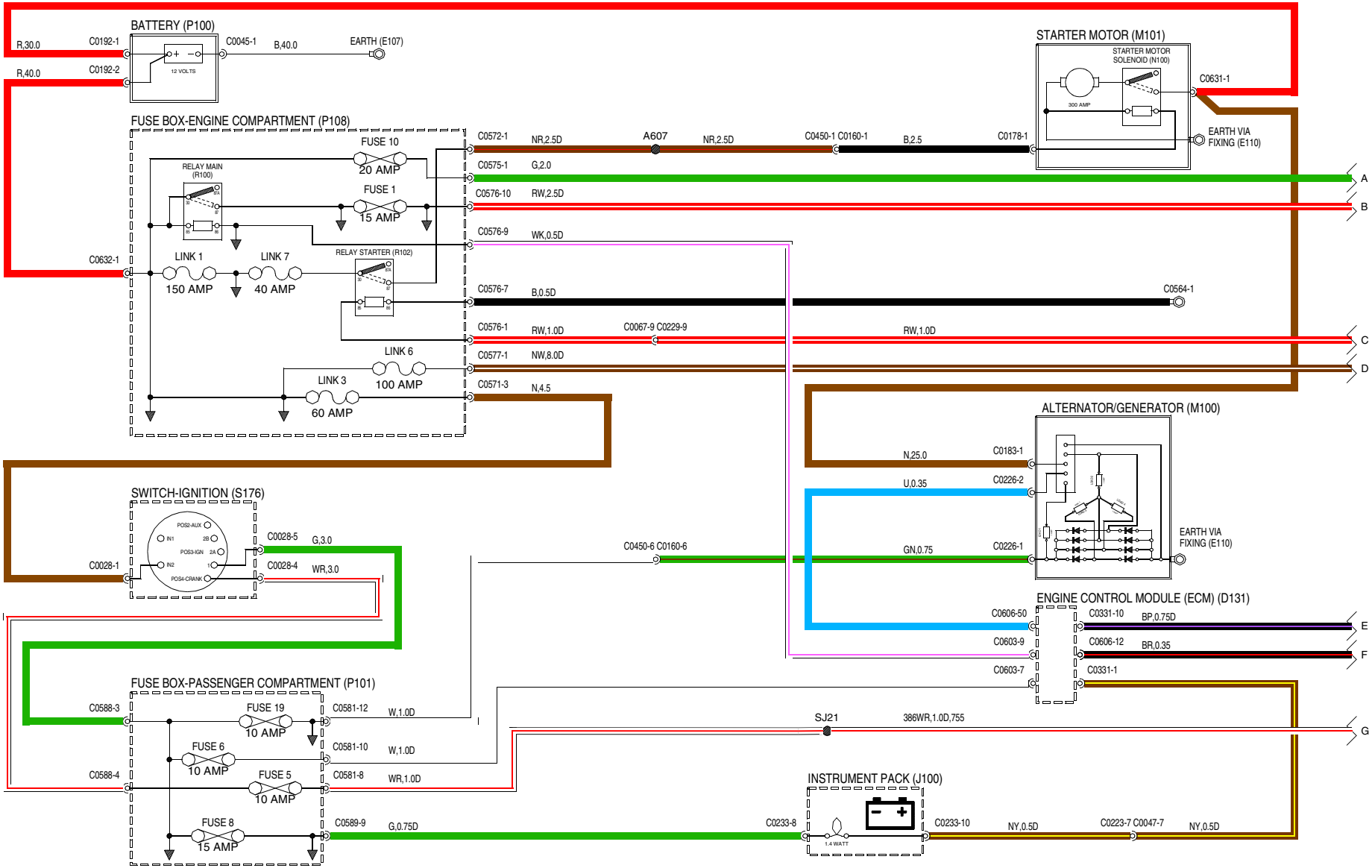

VWR004330-A-01

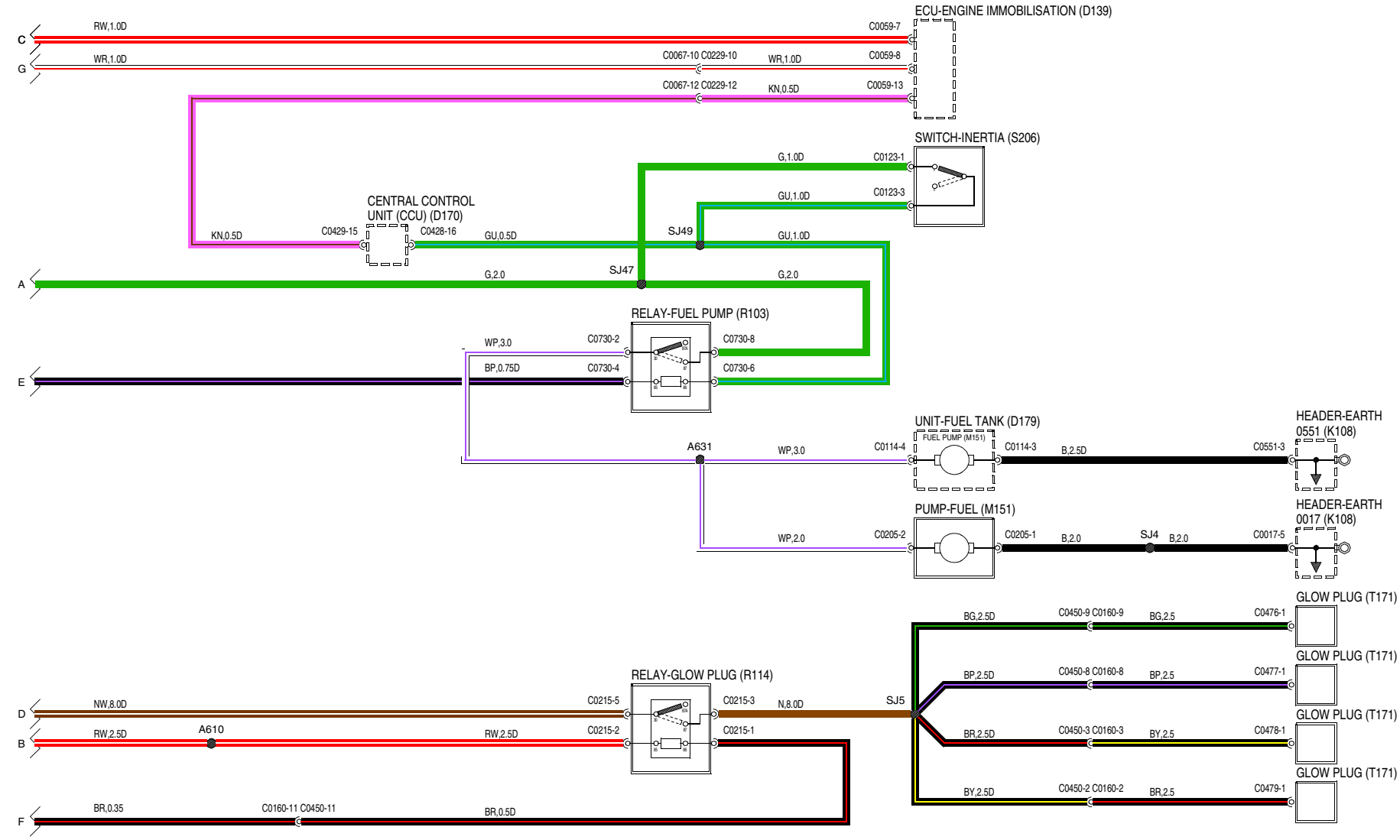

VWR004330-A-02

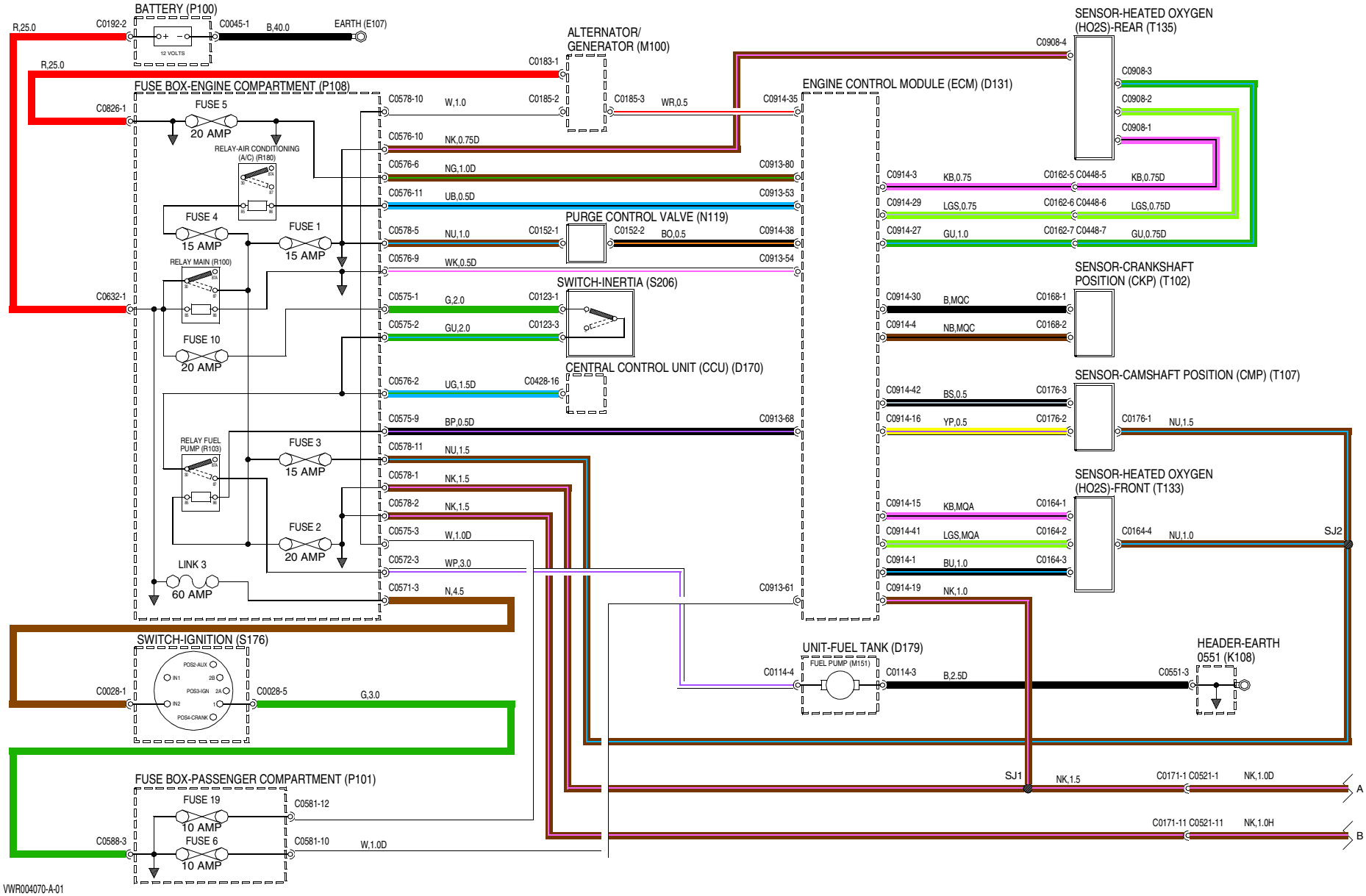
BATTERY (P100)
12 VOLTS
R,25.0
C0192-2
C0045-1
B,40.0
EARTH (E107)
R,25.0
C0826-1
FUSE BOX-ENGINE COMPARTMENT (P108)
FUSE 5
20 AMP
RELAY-AIR CONDITIONING (A/C) (R180)
FUSE 4
15 AMP
FUSE 1
15 AMP
RELAY MAIN (R100)
C0632-1
FUSE 10
20 AMP
RELAY FUEL PUMP (R103)
FUSE 3
15 AMP
FUSE 2
20 AMP
LINK 3
60 AMP
ALTERNATOR/ GENERATOR (M100)
C0183-1
C0185-2
C0185-3
WR,0.5
C0578-10
W,1.0
C0576-10
NK,0.75D
C0576-6
NG,1.0D
C0576-11
UB,0.5D
C0578-5
NU,1.0
C0576-9
WK,0.5D
C0575-1
G,2.0
C0575-2
GU,2.0
C0576-2
UG,1.5D
C0575-9
BP,0.5D
C0578-11
NU,1.5
C0578-1
NK,1.5
C0578-2
NK,1.5
C0575-3
W,1.0D
C0572-3
WP,3.0
C0571-3
N,4.5
PURGE CONTROL VALVE (N119)
C0152-1
C0152-2
BO,0.5
SWITCH-INERTIA (S206)
C0123-1
C0123-3
CENTRAL CONTROL UNIT (CCU) (D170)
C0428-16
ENGINE CONTROL MODULE (ECM) (D131)
C0914-35
C0913-80
C0913-53
C0914-38
C0913-54
C0913-68
C0913-61
SENSOR-HEATED OXYGEN (HO2S)-REAR (T135)
C0908-4
C0908-3
C0908-2
C0908-1
C0914-3
KB,0.75
C0162-5
C0448-5
KB,0.75D
C0914-29
LGS,0.75
C0162-6
C0448-6
LGS,0.75D
C0914-27
GU,1.0
C0162-7
C0448-7
GU,0.75D
SENSOR-CRANKSHAFT POSITION (CKP) (T102)
C0914-30
B,MQC
C0168-1
C0914-4
NB,MQC
C0168-2
SENSOR-CAMSHAFT POSITION (CMP) (T107)
C0914-42
BS,0.5
C0176-3
C0914-16
YP,0.5
C0176-2
C0176-1
NU,1.5
SENSOR-HEATED OXYGEN (HO2S)-FRONT (T133)
C0914-15
KB,MQA
C0164-1
C0914-41
LGS,MQA
C0164-2
C0164-4
NU,1.0
SJ2
C0914-1
BU,1.0
C0164-3
C0914-19
NK,1.0
SWITCH-IGNITION (S176)
POS2-AUX
IN1
2B
POS3-IGN
2A
IN2
1
POS4-CRANK
C0028-1
C0028-5
G,3.0
UNIT-FUEL TANK (D179)
FUEL PUMP (M151)
C0114-4
C0114-3
B,2.5D
HEADER-EARTH 0551 (K108)
C0551-3
FUSE BOX-PASSENGER COMPARTMENT (P101)
FUSE 19
10 AMP
C0581-12
C0588-3
FUSE 6
10 AMP
C0581-10
W,1.0D
SJ1
NK,1.5
C0171-1
C0521-1
NK,1.0D
A
C0171-11
C0521-11
NK,1.0H
B
VWR004070-A-01

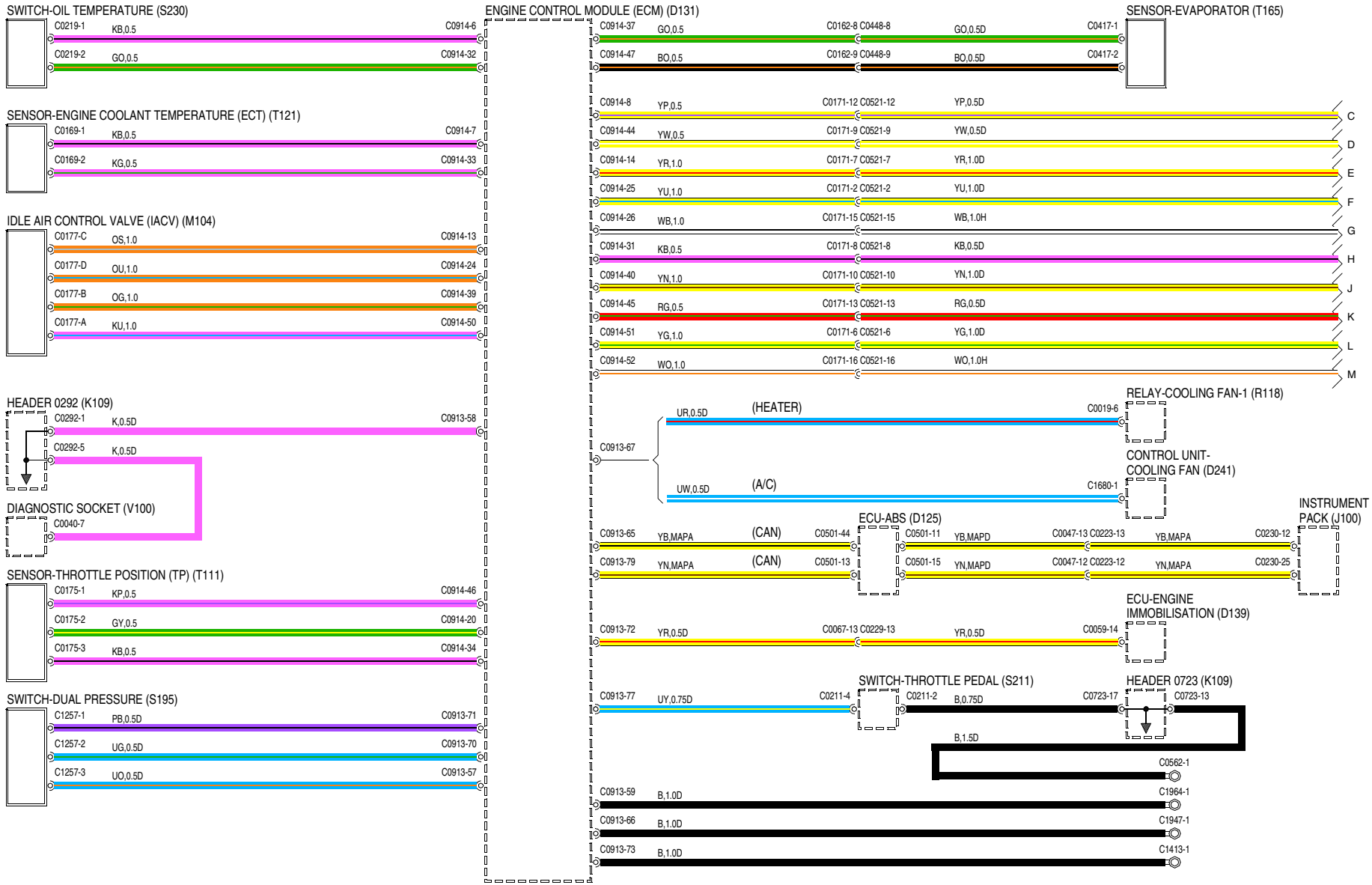
SWITCH-OIL TEMPERATURE (S230)
C0219-1 KB,0.5 C0914-6
C0219-2 GO,0.5 C0914-32
SENSOR-ENGINE COOLANT TEMPERATURE (ECT) (T121)
C0169-1 KB,0.5 C0914-7
C0169-2 KG,0.5 C0914-33
IDLE AIR CONTROL VALVE (IACV) (M104)
C0177-C OS,1.0 C0914-13
C0177-D OU,1.0 C0914-24
C0177-B OG,1.0 C0914-39
C0177-A KU,1.0 C0914-50
HEADER 0292 (K109)
C0292-1 K,0.5D C0913-58
C0292-5 K,0.5D
DIAGNOSTIC SOCKET (V100)
C0040-7
SENSOR-THROTTLE POSITION (TP) (T111)
C0175-1 KP,0.5 C0914-46
C0175-2 GY,0.5 C0914-20
C0175-3 KB,0.5 C0914-34
SWITCH-DUAL PRESSURE (S195)
C1257-1 PB,0.5D C0913-71
C1257-2 UG,0.5D C0913-70
C1257-3 UO,0.5D C0913-57
ENGINE CONTROL MODULE (ECM) (D131)
C0914-37 GO,0.5 C0162-8 C0448-8 GO,0.5D C0417-1
C0914-47 BO,0.5 C0162-9 C0448-9 BO,0.5D C0417-2
SENSOR-EVAPORATOR (T165)
C0914-8 YP,0.5 C0171-12 C0521-12 YP,0.5D C
C0914-44 YW,0.5 C0171-9 C0521-9 YW,0.5D D
C0914-14 YR,1.0 C0171-7 C0521-7 YR,1.0D E
C0914-25 YU,1.0 C0171-2 C0521-2 YU,1.0D F
C0914-26 WB,1.0 C0171-15 C0521-15 WB,1.0H G
C0914-31 KB,0.5 C0171-8 C0521-8 KB,0.5D H
C0914-40 YN,1.0 C0171-10 C0521-10 YN,1.0D J
C0914-45 RG,0.5 C0171-13 C0521-13 RG,0.5D K
C0914-51 YG,1.0 C0171-6 C0521-6 YG,1.0D L
C0914-52 WO,1.0 C0171-16 C0521-16 WO,1.0H M
RELAY-COOLING FAN-1 (R118)
C0913-67
UR,0.5D (HEATER) C0019-6
CONTROL UNIT-COOLING FAN (D241)
UW,0.5D (A/C) C1680-1
ECU-ABS (D125)
INSTRUMENT PACK (J100)
C0913-65 YB,MAPA (CAN) C0501-44 C0501-11 YB,MAPD C0047-13 C0223-13 YB,MAPA C0230-12
C0913-79 YN,MAPA (CAN) C0501-13 C0501-15 YN,MAPD C0047-12 C0223-12 YN,MAPA C0230-25
ECU-ENGINE IMMOBILISATION (D139)
C0913-72 YR,0.5D C0067-13 C0229-13 YR,0.5D C0059-14
SWITCH-THROTTLE PEDAL (S211)
HEADER 0723 (K109)
C0913-77 UY,0.75D C0211-4 C0211-2 B,0.75D C0723-17 C0723-13
B,1.5D
C0562-1
C0913-59 B,1.0D C1964-1
C0913-66 B,1.0D C1947-1
C0913-73 B,1.0D C1413-1
VWR004070-A-02

VWR004070-A-03

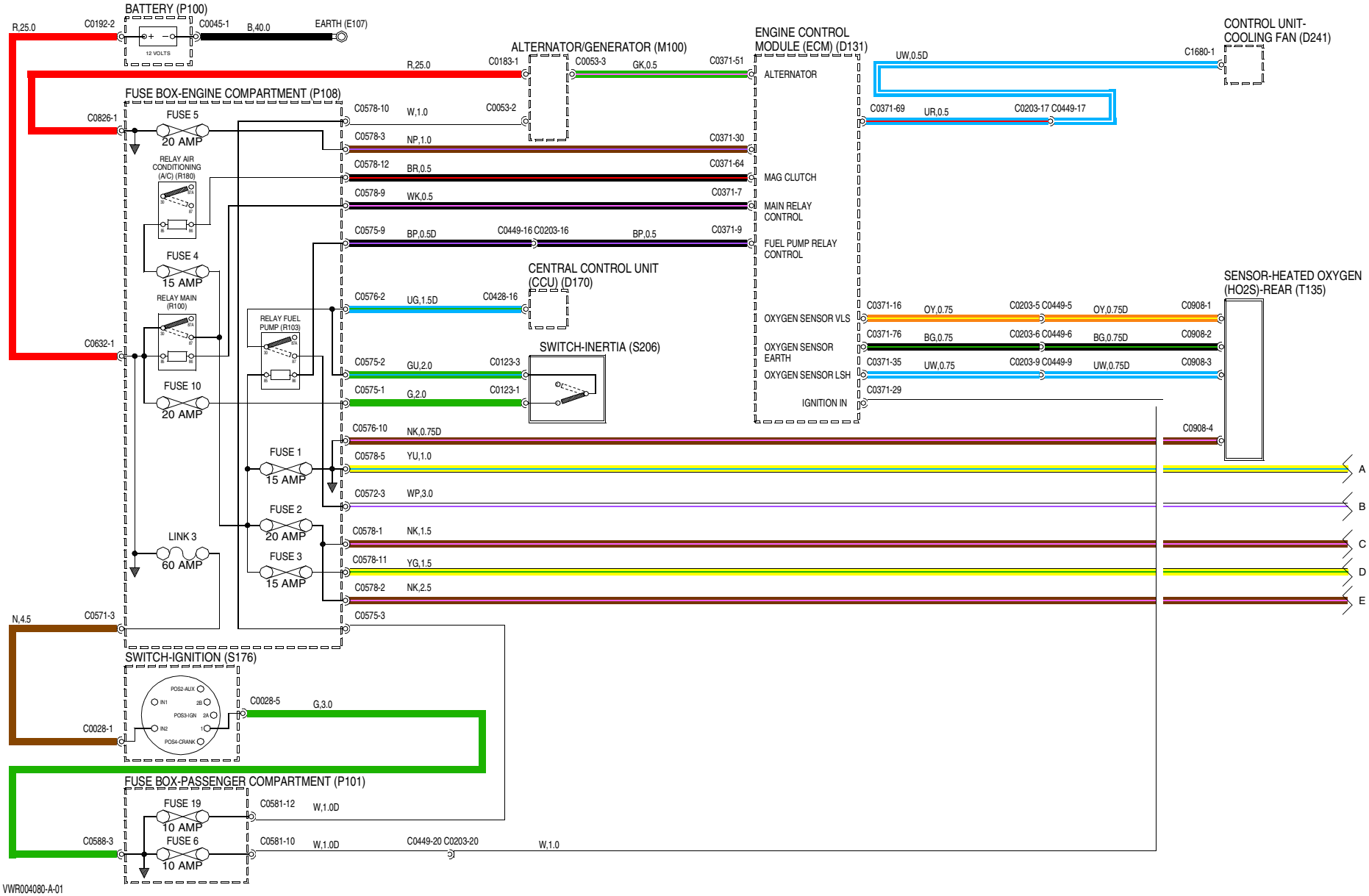
BATTERY (P100)
12 VOLTS
R,25.0
C0192-2
C0045-1
B,40.0
EARTH (E107)
ALTERNATOR/GENERATOR (M100)
C0183-1
C0053-3
GK,0.5
C0371-51
C0053-2
ENGINE CONTROL MODULE (ECM) (D131)
ALTERNATOR
MAG CLUTCH
MAIN RELAY CONTROL
FUEL PUMP RELAY CONTROL
OXYGEN SENSOR VLS
OXYGEN SENSOR EARTH
OXYGEN SENSOR LSH
IGNITION IN
CONTROL UNIT-COOLING FAN (D241)
C1680-1
UW,0.5D
C0371-69
UR,0.5
C0203-17 C0449-17
FUSE BOX-ENGINE COMPARTMENT (P108)
C0826-1
FUSE 5
20 AMP
RELAY AIR CONDITIONING (A/C) (R180)
FUSE 4
15 AMP
RELAY MAIN (R100)
C0632-1
FUSE 10
20 AMP
RELAY FUEL PUMP (R103)
FUSE 1
15 AMP
FUSE 2
20 AMP
FUSE 3
15 AMP
LINK 3
60 AMP
C0578-10
W,1.0
C0578-3
NP,1.0
C0371-30
C0578-12
BR,0.5
C0371-64
C0578-9
WK,0.5
C0371-7
C0575-9
BP,0.5D
C0449-16 C0203-16
BP,0.5
C0371-9
C0576-2
UG,1.5D
C0428-16
CENTRAL CONTROL UNIT (CCU) (D170)
C0575-2
GU,2.0
C0123-3
SWITCH-INERTIA (S206)
C0575-1
G,2.0
C0123-1
C0576-10
NK,0.75D
C0578-5
YU,1.0
C0572-3
WP,3.0
C0578-1
NK,1.5
C0578-11
YG,1.5
C0578-2
NK,2.5
C0575-3
C0371-16
OY,0.75
C0203-5 C0449-5
OY,0.75D
C0908-1
C0371-76
BG,0.75
C0203-6 C0449-6
BG,0.75D
C0908-2
C0371-35
UW,0.75
C0203-9 C0449-9
UW,0.75D
C0908-3
C0371-29
C0908-4
SENSOR-HEATED OXYGEN (HO2S)-REAR (T135)
A
B
C
D
E
N,4.5
C0571-3
SWITCH-IGNITION (S176)
POS2-AUX
IN1
2B
POS3-IGN
2A
IN2
1
POS4-CRANK
C0028-5
G,3.0
C0028-1
FUSE BOX-PASSENGER COMPARTMENT (P101)
FUSE 19
10 AMP
C0581-12
W,1.0D
C0588-3
FUSE 6
10 AMP
C0581-10
W,1.0D
C0449-20 C0203-20
W,1.0
VWR004080-A-01

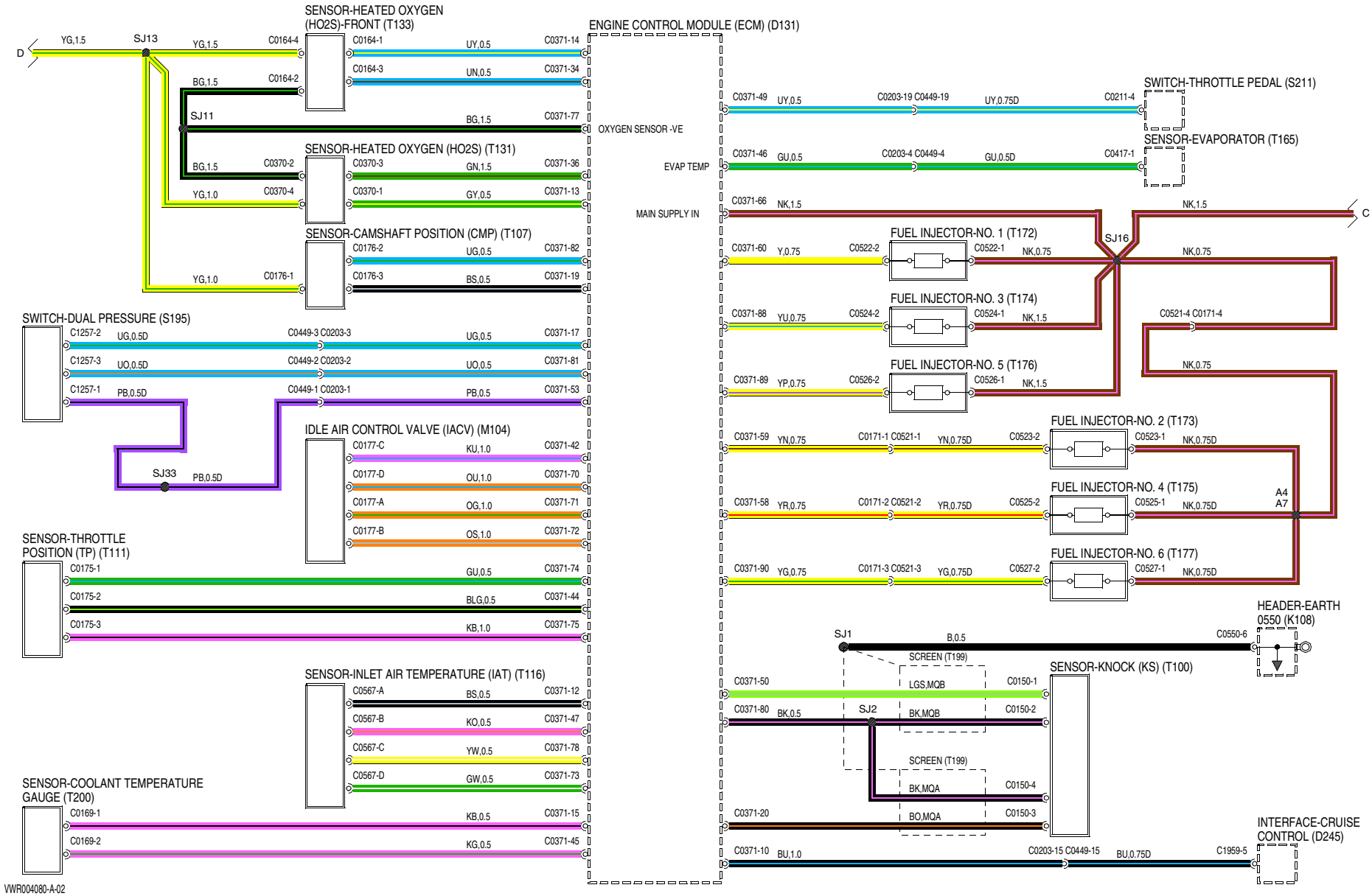
SENSOR-HEATED OXYGEN (HO2S)-FRONT (T133)
ENGINE CONTROL MODULE (ECM) (D131)
D
YG,1.5
SJ13
YG,1.5
C0164-4
C0164-1
UY,0.5
C0371-14
C0164-3
UN,0.5
C0371-34
BG,1.5
C0164-2
SJ11
BG,1.5
C0371-77
OXYGEN SENSOR -VE
SENSOR-HEATED OXYGEN (HO2S) (T131)
BG,1.5
C0370-2
C0370-3
GN,1.5
C0371-36
EVAP TEMP
YG,1.0
C0370-4
C0370-1
GY,0.5
C0371-13
MAIN SUPPLY IN
SENSOR-CAMSHAFT POSITION (CMP) (T107)
C0176-2
UG,0.5
C0371-82
YG,1.0
C0176-1
C0176-3
BS,0.5
C0371-19
SWITCH-DUAL PRESSURE (S195)
C1257-2
UG,0.5D
C0449-3 C0203-3
UG,0.5
C0371-17
C1257-3
UO,0.5D
C0449-2 C0203-2
UO,0.5
C0371-81
C1257-1
PB,0.5D
C0449-1 C0203-1
PB,0.5
C0371-53
IDLE AIR CONTROL VALVE (IACV) (M104)
SJ33
PB,0.5D
C0177-C
KU,1.0
C0371-42
C0177-D
OU,1.0
C0371-70
C0177-A
OG,1.0
C0371-71
C0177-B
OS,1.0
C0371-72
SENSOR-THROTTLE POSITION (TP) (T111)
C0175-1
GU,0.5
C0371-74
C0175-2
BLG,0.5
C0371-44
C0175-3
KB,1.0
C0371-75
SENSOR-INLET AIR TEMPERATURE (IAT) (T116)
C0567-A
BS,0.5
C0371-12
C0567-B
KO,0.5
C0371-47
C0567-C
YW,0.5
C0371-78
C0567-D
GW,0.5
C0371-73
SENSOR-COOLANT TEMPERATURE GAUGE (T200)
C0169-1
KB,0.5
C0371-15
C0169-2
KG,0.5
C0371-45
VWR004080-A-02
C0371-49
UY,0.5
C0203-19 C0449-19
UY,0.75D
C0211-4
SWITCH-THROTTLE PEDAL (S211)
C0371-46
GU,0.5
C0203-4 C0449-4
GU,0.5D
C0417-1
SENSOR-EVAPORATOR (T165)
C0371-66
NK,1.5
NK,1.5
C
FUEL INJECTOR-NO. 1 (T172)
C0371-60
Y,0.75
C0522-2
C0522-1
NK,0.75
SJ16
NK,0.75
FUEL INJECTOR-NO. 3 (T174)
C0371-88
YU,0.75
C0524-2
C0524-1
NK,1.5
C0521-4 C0171-4
FUEL INJECTOR-NO. 5 (T176)
C0371-89
YP,0.75
C0526-2
C0526-1
NK,1.5
NK,0.75
FUEL INJECTOR-NO. 2 (T173)
C0371-59
YN,0.75
C0171-1 C0521-1
YN,0.75D
C0523-2
C0523-1
NK,0.75D
FUEL INJECTOR-NO. 4 (T175)
C0371-58
YR,0.75
C0171-2 C0521-2
YR,0.75D
C0525-2
C0525-1
NK,0.75D
A4
A7
FUEL INJECTOR-NO. 6 (T177)
C0371-90
YG,0.75
C0171-3 C0521-3
YG,0.75D
C0527-2
C0527-1
NK,0.75D
HEADER-EARTH 0550 (K108)
SJ1
B,0.5
C0550-6
SCREEN (T199)
SENSOR-KNOCK (KS) (T100)
C0371-50
LGS,MQB
C0150-1
C0371-80
BK,0.5
SJ2
BK,MQB
C0150-2
SCREEN (T199)
BK,MQA
C0150-4
C0371-20
BO,MQA
C0150-3
INTERFACE-CRUISE CONTROL (D245)
C0371-10
BU,1.0
C0203-15 C0449-15
BU,0.75D
C1959-5

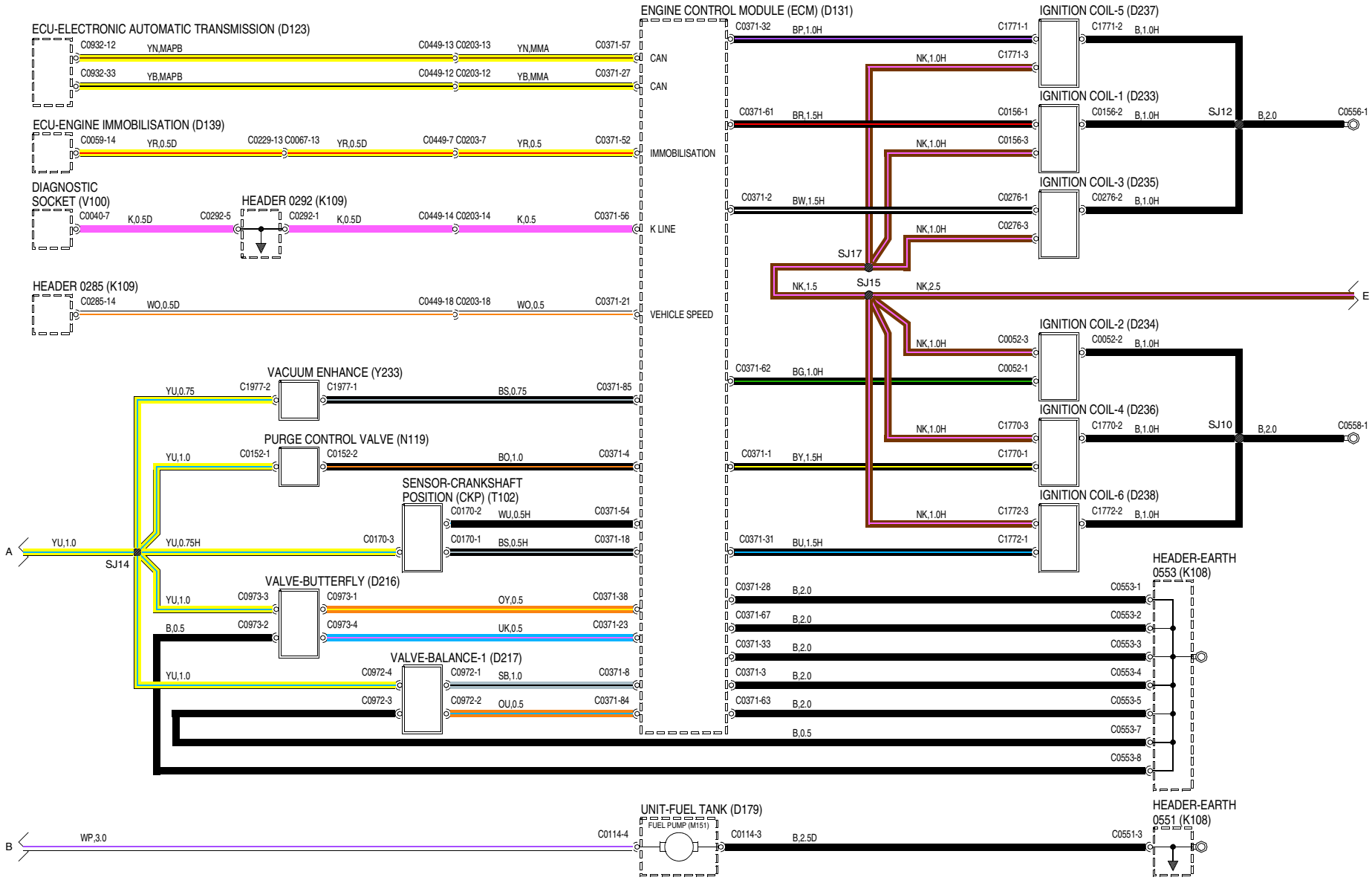
ECU-ELECTRONIC AUTOMATIC TRANSMISSION (D123)
C0932-12 YN,MAPB C0449-13 C0203-13 YN,MMA C0371-57 CAN
C0932-33 YB,MAPB C0449-12 C0203-12 YB,MMA C0371-27 CAN
ECU-ENGINE IMMOBILISATION (D139)
C0059-14 YR,0.5D C0229-13 C0067-13 YR,0.5D C0449-7 C0203-7 YR,0.5 C0371-52 IMMOBILISATION
DIAGNOSTIC SOCKET (V100)
C0040-7 K,0.5D C0292-5
HEADER 0292 (K109)
C0292-1 K,0.5D C0449-14 C0203-14 K,0.5 C0371-56 K LINE
HEADER 0285 (K109)
C0285-14 WO,0.5D C0449-18 C0203-18 WO,0.5 C0371-21 VEHICLE SPEED
ENGINE CONTROL MODULE (ECM) (D131)
C0371-32 BP,1.0H
C0371-61 BR,1.5H
C0371-2 BW,1.5H
C0371-62 BG,1.0H
C0371-1 BY,1.5H
C0371-31 BU,1.5H
C0371-28 B,2.0
C0371-67 B,2.0
C0371-33 B,2.0
C0371-3 B,2.0
C0371-63 B,2.0
IGNITION COIL-5 (D237)
C1771-1 C1771-2 B,1.0H
C1771-3 NK,1.0H
IGNITION COIL-1 (D233)
C0156-1 C0156-2 B,1.0H
C0156-3 NK,1.0H
IGNITION COIL-3 (D235)
C0276-1 C0276-2 B,1.0H
C0276-3 NK,1.0H
SJ12 B,2.0 C0556-1
SJ17
SJ15
NK,1.5 NK,2.5 E
IGNITION COIL-2 (D234)
C0052-3 C0052-2 B,1.0H
C0052-1 NK,1.0H
IGNITION COIL-4 (D236)
C1770-3 C1770-2 B,1.0H
C1770-1 NK,1.0H
SJ10 B,2.0 C0558-1
IGNITION COIL-6 (D238)
C1772-3 C1772-2 B,1.0H
C1772-1 NK,1.0H
VACUUM ENHANCE (Y233)
C1977-2 C1977-1 YU,0.75 BS,0.75 C0371-85
PURGE CONTROL VALVE (N119)
C0152-1 C0152-2 YU,1.0 BO,1.0 C0371-4
SENSOR-CRANKSHAFT POSITION (CKP) (T102)
C0170-2 WU,0.5H C0371-54
C0170-3 C0170-1 YU,0.75H BS,0.5H C0371-18
A YU,1.0 SJ14
VALVE-BUTTERFLY (D216)
C0973-3 C0973-1 YU,1.0 OY,0.5 C0371-38
C0973-2 C0973-4 B,0.5 UK,0.5 C0371-23
VALVE-BALANCE-1 (D217)
C0972-4 C0972-1 YU,1.0 SB,1.0 C0371-8
C0972-3 C0972-2 OU,0.5 C0371-84
HEADER-EARTH 0553 (K108)
C0553-1 C0553-2 C0553-3 C0553-4 C0553-5 C0553-7 C0553-8
B,0.5
UNIT-FUEL TANK (D179)
FUEL PUMP (M151)
B WP,3.0 C0114-4 C0114-3 B,2.5D
HEADER-EARTH 0551 (K108)
C0551-3
VWR004080-A-03

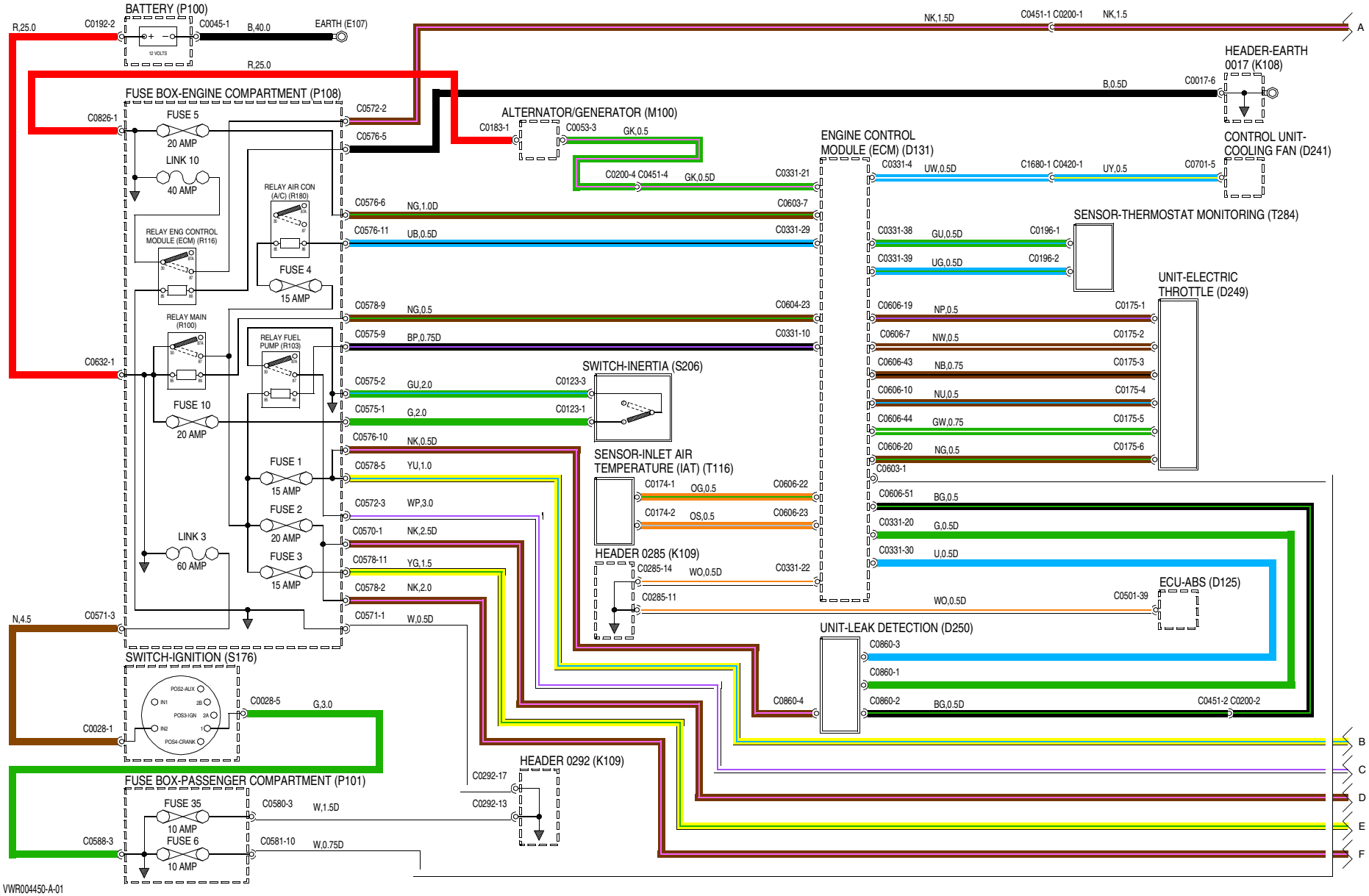
BATTERY (P100)
12 VOLTS
R,25.0
C0192-2
C0045-1
B,40.0
EARTH (E107)
R,25.0
NK,1.5D
C0451-1 C0200-1
NK,1.5
A
HEADER-EARTH 0017 (K108)
B,0.5D
C0017-6
FUSE BOX-ENGINE COMPARTMENT (P108)
C0826-1
FUSE 5
20 AMP
LINK 10
40 AMP
RELAY ENG CONTROL MODULE (ECM) (R116)
RELAY AIR CON (A/C) (R180)
FUSE 4
15 AMP
RELAY MAIN (R100)
RELAY FUEL PUMP (R103)
C0632-1
FUSE 10
20 AMP
FUSE 1
15 AMP
FUSE 2
20 AMP
LINK 3
60 AMP
FUSE 3
15 AMP
C0572-2
C0576-5
C0576-6
NG,1.0D
C0576-11
UB,0.5D
C0578-9
NG,0.5
C0575-9
BP,0.75D
C0575-2
GU,2.0
C0575-1
G,2.0
C0576-10
NK,0.5D
C0578-5
YU,1.0
C0572-3
WP,3.0
C0570-1
NK,2.5D
C0578-11
YG,1.5
C0578-2
NK,2.0
C0571-1
W,0.5D
N,4.5
C0571-3
ALTERNATOR/GENERATOR (M100)
C0183-1
C0053-3
GK,0.5
C0200-4 C0451-4
GK,0.5D
C0331-21
C0603-7
C0331-29
C0604-23
C0331-10
C0123-3
C0123-1
SWITCH-INERTIA (S206)
SENSOR-INLET AIR TEMPERATURE (IAT) (T116)
C0174-1
OG,0.5
C0606-22
C0174-2
OS,0.5
C0606-23
HEADER 0285 (K109)
C0285-14
WO,0.5D
C0331-22
C0285-11
WO,0.5D
ENGINE CONTROL MODULE (ECM) (D131)
C0331-4
UW,0.5D
C1680-1 C0420-1
UY,0.5
C0701-5
CONTROL UNIT-COOLING FAN (D241)
SENSOR-THERMOSTAT MONITORING (T284)
C0331-38
GU,0.5D
C0196-1
C0331-39
UG,0.5D
C0196-2
UNIT-ELECTRIC THROTTLE (D249)
C0606-19
NP,0.5
C0175-1
C0606-7
NW,0.5
C0175-2
C0606-43
NB,0.75
C0175-3
C0606-10
NU,0.5
C0175-4
C0606-44
GW,0.75
C0175-5
C0606-20
NG,0.5
C0175-6
C0603-1
C0606-51
BG,0.5
C0331-20
G,0.5D
C0331-30
U,0.5D
ECU-ABS (D125)
C0501-39
UNIT-LEAK DETECTION (D250)
C0860-3
C0860-1
C0860-4
C0860-2
BG,0.5D
C0451-2 C0200-2
SWITCH-IGNITION (S176)
POS2-AUX
IN1
2B
POS3-IGN
2A
IN2
1
POS4-CRANK
C0028-5
G,3.0
C0028-1
HEADER 0292 (K109)
C0292-17
C0292-13
FUSE BOX-PASSENGER COMPARTMENT (P101)
FUSE 35
10 AMP
C0580-3
W,1.5D
C0588-3
FUSE 6
10 AMP
C0581-10
W,0.75D
B
C
D
E
F
VWR004450-A-01

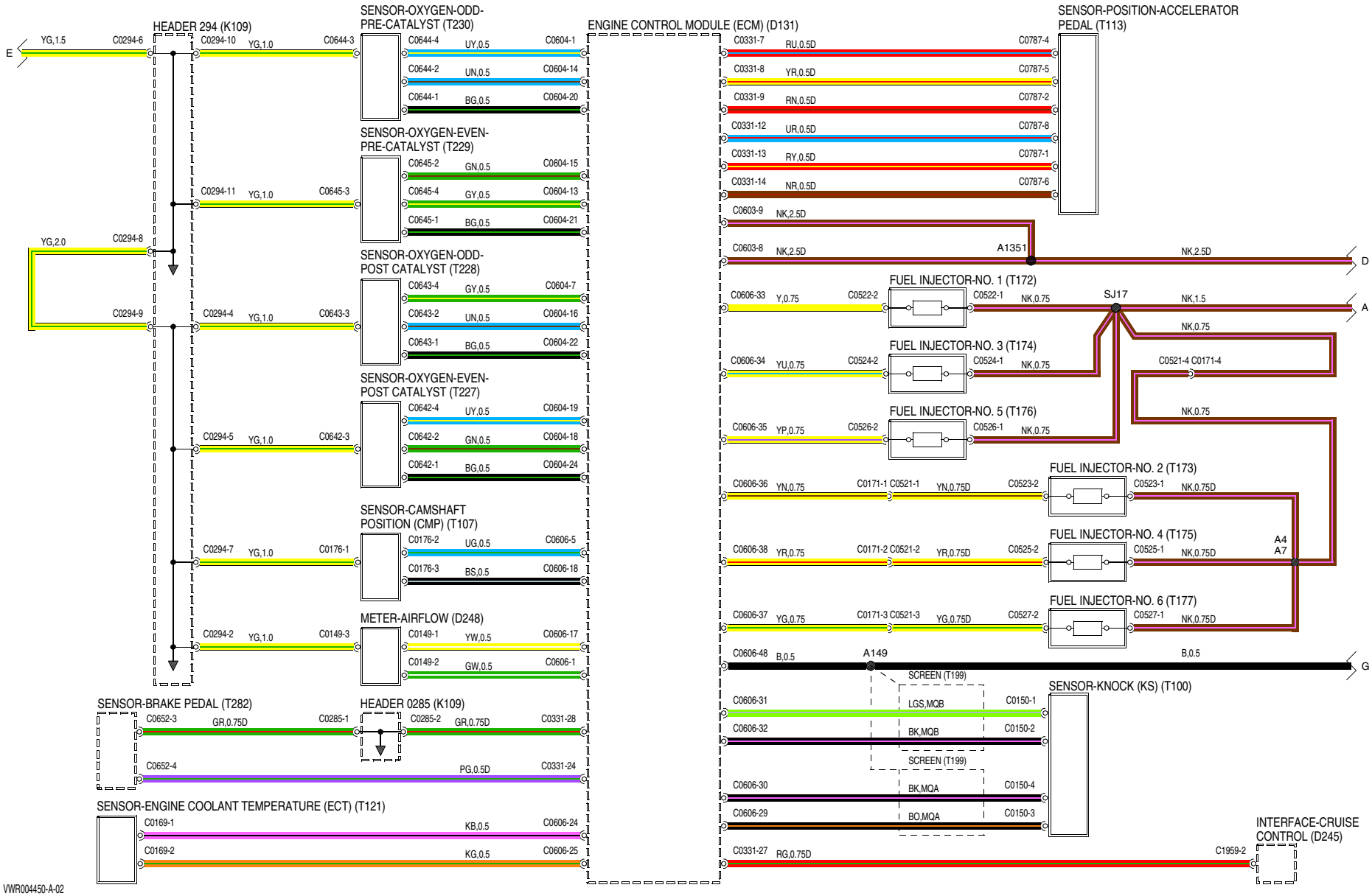
HEADER 294 (K109)
SENSOR-OXYGEN-ODD-PRE-CATALYST (T230)
ENGINE CONTROL MODULE (ECM) (D131)
SENSOR-POSITION-ACCELERATOR PEDAL (T113)
SENSOR-OXYGEN-EVEN-PRE-CATALYST (T229)
SENSOR-OXYGEN-ODD-POST CATALYST (T228)
SENSOR-OXYGEN-EVEN-POST CATALYST (T227)
SENSOR-CAMSHAFT POSITION (CMP) (T107)
METER-AIRFLOW (D248)
FUEL INJECTOR-NO. 1 (T172)
FUEL INJECTOR-NO. 3 (T174)
FUEL INJECTOR-NO. 5 (T176)
FUEL INJECTOR-NO. 2 (T173)
FUEL INJECTOR-NO. 4 (T175)
FUEL INJECTOR-NO. 6 (T177)
SENSOR-BRAKE PEDAL (T282)
HEADER 0285 (K109)
SENSOR-KNOCK (KS) (T100)
SENSOR-ENGINE COOLANT TEMPERATURE (ECT) (T121)
INTERFACE-CRUISE CONTROL (D245)
SCREEN (T199)
A1351
SJ17
A149
A4
A7
VWR004450-A-02

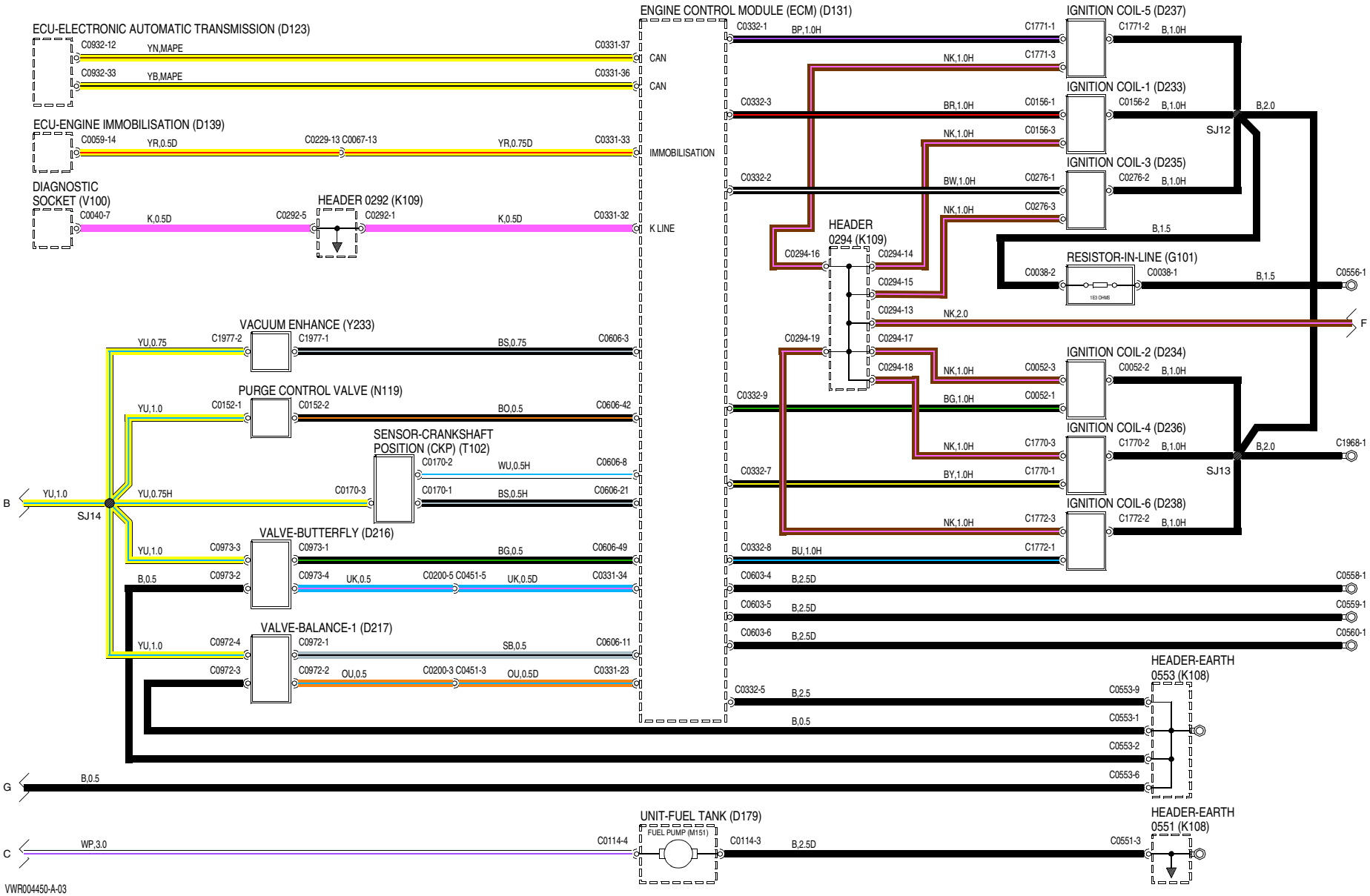
ECU-ELECTRONIC AUTOMATIC TRANSMISSION (D123)
C0932-12
YN,MAPE
C0331-37
CAN
C0932-33
YB,MAPE
C0331-36
CAN
ECU-ENGINE IMMOBILISATION (D139)
C0059-14
YR,0.5D
C0229-13 C0067-13
YR,0.75D
C0331-33
IMMOBILISATION
DIAGNOSTIC SOCKET (V100)
C0040-7
K,0.5D
C0292-5
HEADER 0292 (K109)
C0292-1
K,0.5D
C0331-32
K LINE
ENGINE CONTROL MODULE (ECM) (D131)
C0332-1
BP,1.0H
C0332-3
BR,1.0H
C0332-2
BW,1.0H
C0332-9
BG,1.0H
C0332-7
BY,1.0H
C0332-8
BU,1.0H
C0603-4
B,2.5D
C0603-5
B,2.5D
C0603-6
B,2.5D
C0332-5
B,2.5
B,0.5
IGNITION COIL-5 (D237)
C1771-1
C1771-2
B,1.0H
C1771-3
NK,1.0H
IGNITION COIL-1 (D233)
C0156-1
C0156-2
B,1.0H
C0156-3
NK,1.0H
B,2.0
SJ12
IGNITION COIL-3 (D235)
C0276-1
C0276-2
B,1.0H
C0276-3
NK,1.0H
B,1.5
HEADER 0294 (K109)
C0294-16
C0294-14
C0294-15
C0294-13
NK,2.0
C0294-19
C0294-17
C0294-18
RESISTOR-IN-LINE (G101)
C0038-2
C0038-1
B,1.5
C0556-1
F
IGNITION COIL-2 (D234)
C0052-3
C0052-2
B,1.0H
C0052-1
IGNITION COIL-4 (D236)
C1770-3
C1770-2
B,1.0H
C1770-1
B,2.0
C1968-1
SJ13
IGNITION COIL-6 (D238)
C1772-3
C1772-2
B,1.0H
C1772-1
C0558-1
C0559-1
C0560-1
HEADER-EARTH 0553 (K108)
C0553-9
C0553-1
C0553-2
C0553-6
VACUUM ENHANCE (Y233)
YU,0.75
C1977-2
C1977-1
BS,0.75
C0606-3
PURGE CONTROL VALVE (N119)
YU,1.0
C0152-1
C0152-2
BO,0.5
C0606-42
SENSOR-CRANKSHAFT POSITION (CKP) (T102)
C0170-2
WU,0.5H
C0606-8
C0170-3
C0170-1
BS,0.5H
C0606-21
B
YU,1.0
YU,0.75H
SJ14
VALVE-BUTTERFLY (D216)
YU,1.0
C0973-3
C0973-1
BG,0.5
C0606-49
B,0.5
C0973-2
C0973-4
UK,0.5
C0200-5 C0451-5
UK,0.5D
C0331-34
VALVE-BALANCE-1 (D217)
YU,1.0
C0972-4
C0972-1
SB,0.5
C0606-11
C0972-3
C0972-2
OU,0.5
C0200-3 C0451-3
OU,0.5D
C0331-23
G
B,0.5
UNIT-FUEL TANK (D179)
FUEL PUMP (M151)
C
WP,3.0
C0114-4
C0114-3
B,2.5D
HEADER-EARTH 0551 (K108)
C0551-3
VWR004450-A-03

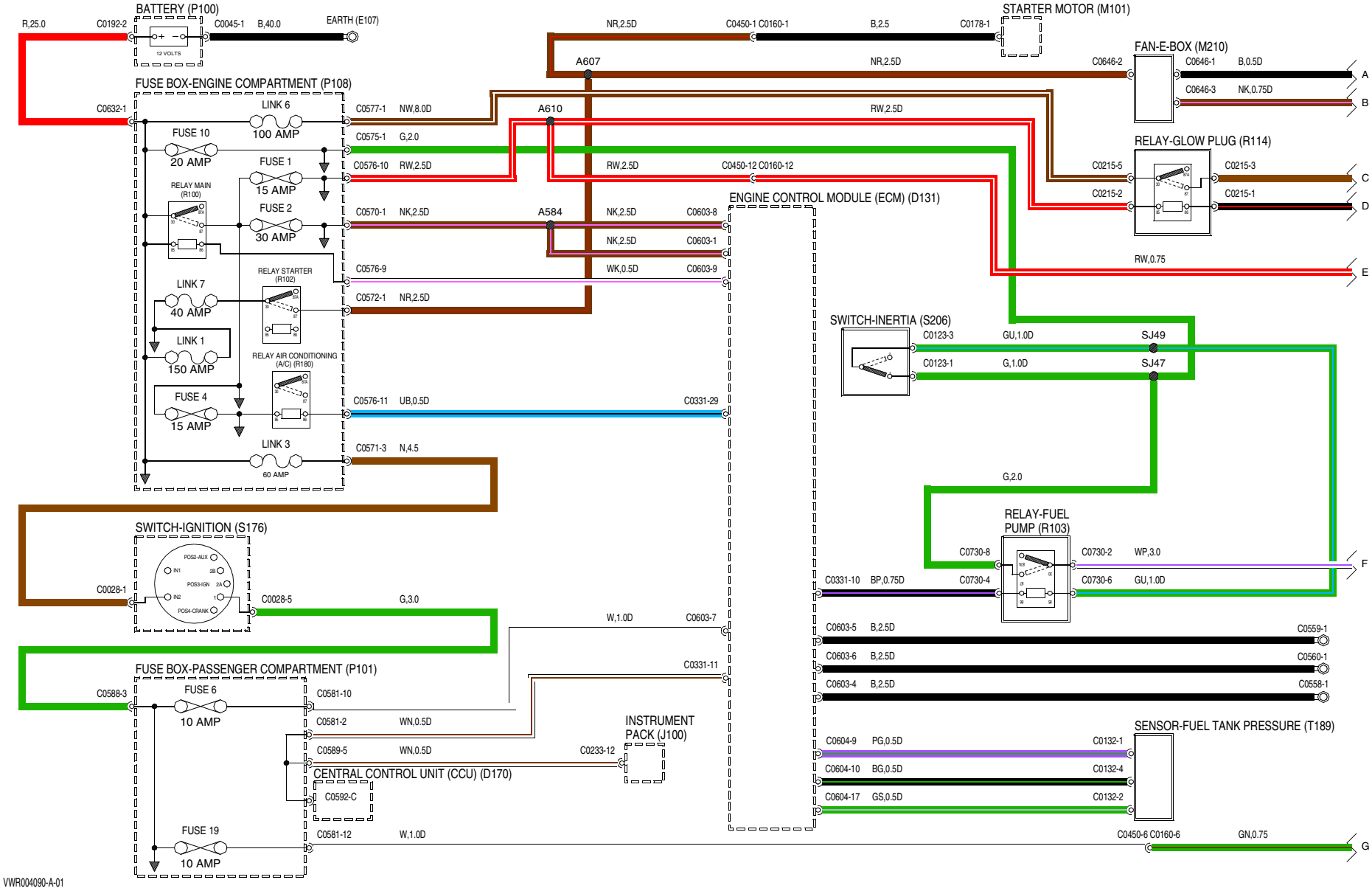
BATTERY (P100)
12 VOLTS
R,25.0
C0192-2
C0045-1
B,40.0
EARTH (E107)
STARTER MOTOR (M101)
NR,2.5D
C0450-1 C0160-1
B,2.5
C0178-1
FAN-E-BOX (M210)
A607
NR,2.5D
C0646-2
C0646-1
B,0.5D
C0646-3
NK,0.75D
A
B
FUSE BOX-ENGINE COMPARTMENT (P108)
C0632-1
LINK 6
100 AMP
C0577-1
NW,8.0D
A610
RW,2.5D
FUSE 10
20 AMP
C0575-1
G,2.0
FUSE 1
15 AMP
C0576-10
RW,2.5D
RW,2.5D
C0450-12 C0160-12
RELAY-GLOW PLUG (R114)
C0215-5
C0215-3
C
C0215-2
C0215-1
D
RELAY MAIN
(R100)
FUSE 2
30 AMP
C0570-1
NK,2.5D
A584
NK,2.5D
C0603-8
ENGINE CONTROL MODULE (ECM) (D131)
NK,2.5D
C0603-1
RW,0.75
E
C0576-9
WK,0.5D
C0603-9
RELAY STARTER
(R102)
LINK 7
40 AMP
C0572-1
NR,2.5D
SWITCH-INERTIA (S206)
C0123-3
GU,1.0D
SJ49
LINK 1
150 AMP
C0123-1
G,1.0D
SJ47
RELAY AIR CONDITIONING
(A/C) (R180)
FUSE 4
15 AMP
C0576-11
UB,0.5D
C0331-29
LINK 3
60 AMP
C0571-3
N,4.5
G,2.0
RELAY-FUEL
PUMP (R103)
C0730-8
C0730-2
WP,3.0
F
SWITCH-IGNITION (S176)
POS2-AUX
IN1
2B
POS3-IGN
2A
IN2
1
POS4-CRANK
C0028-1
C0028-5
G,3.0
C0331-10
BP,0.75D
C0730-4
C0730-6
GU,1.0D
W,1.0D
C0603-7
C0603-5
B,2.5D
C0559-1
C0331-11
C0603-6
B,2.5D
C0560-1
FUSE BOX-PASSENGER COMPARTMENT (P101)
C0588-3
FUSE 6
10 AMP
C0581-10
C0603-4
B,2.5D
C0558-1
C0581-2
WN,0.5D
INSTRUMENT
PACK (J100)
SENSOR-FUEL TANK PRESSURE (T189)
C0604-9
PG,0.5D
C0132-1
C0589-5
WN,0.5D
C0233-12
C0604-10
BG,0.5D
C0132-4
CENTRAL CONTROL UNIT (CCU) (D170)
C0592-C
C0604-17
GS,0.5D
C0132-2
FUSE 19
10 AMP
C0581-12
W,1.0D
C0450-6 C0160-6
GN,0.75
G
VWR004090-A-01

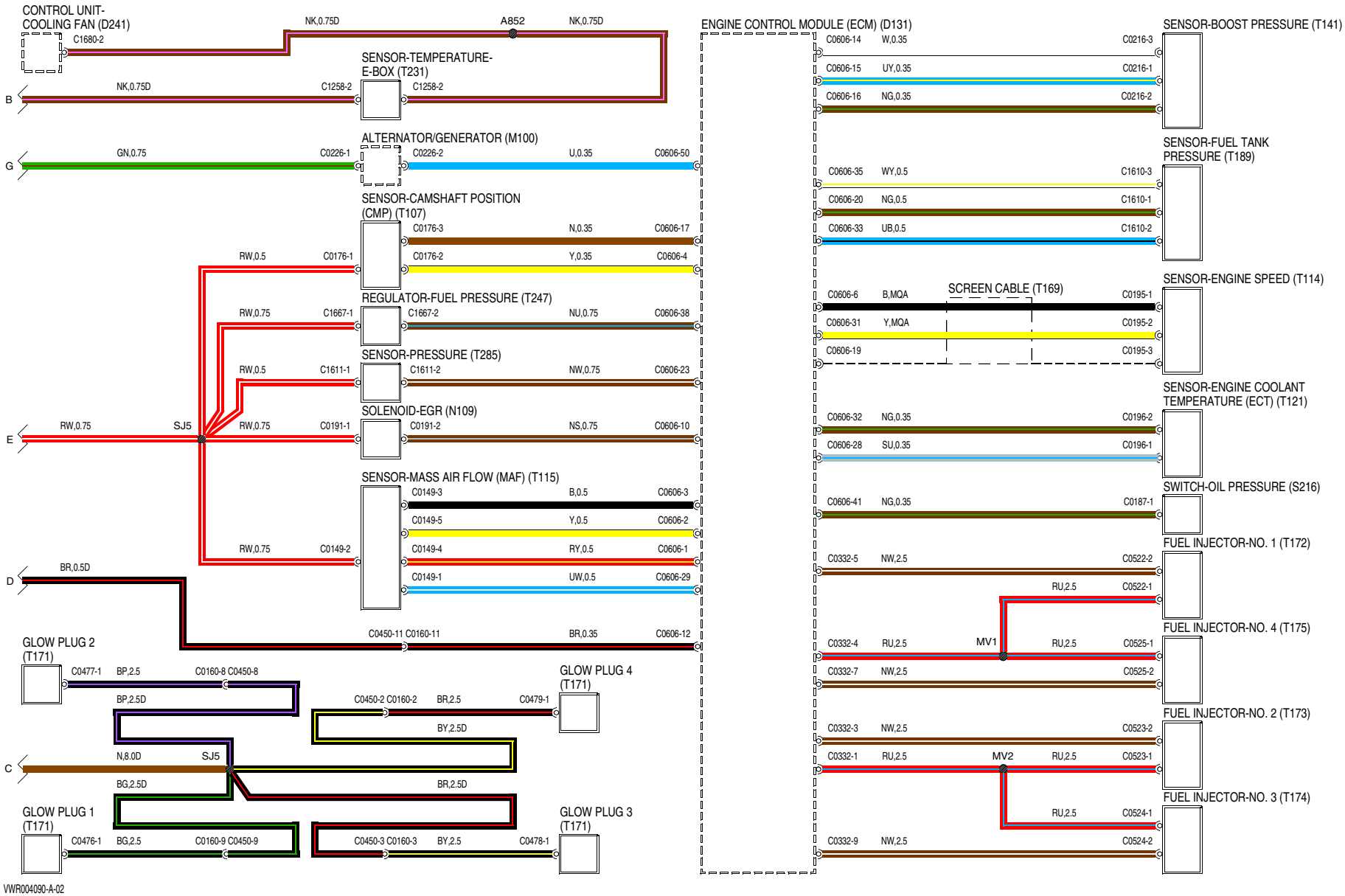
CONTROL UNIT-COOLING FAN (D241)
C1680-2
NK,0.75D
A852
NK,0.75D
SENSOR-TEMPERATURE-E-BOX (T231)
B
NK,0.75D
C1258-2
C1258-2
ALTERNATOR/GENERATOR (M100)
G
GN,0.75
C0226-1
C0226-2
U,0.35
C0606-50
SENSOR-CAMSHAFT POSITION (CMP) (T107)
C0176-3
N,0.35
C0606-17
RW,0.5
C0176-1
C0176-2
Y,0.35
C0606-4
REGULATOR-FUEL PRESSURE (T247)
RW,0.75
C1667-1
C1667-2
NU,0.75
C0606-38
SENSOR-PRESSURE (T285)
RW,0.5
C1611-1
C1611-2
NW,0.75
C0606-23
SOLENOID-EGR (N109)
E
RW,0.75
SJ5
RW,0.75
C0191-1
C0191-2
NS,0.75
C0606-10
SENSOR-MASS AIR FLOW (MAF) (T115)
C0149-3
B,0.5
C0606-3
C0149-5
Y,0.5
C0606-2
RW,0.75
C0149-2
C0149-4
RY,0.5
C0606-1
D
BR,0.5D
C0149-1
UW,0.5
C0606-29
C0450-11 C0160-11
BR,0.35
C0606-12
GLOW PLUG 2 (T171)
C0477-1
BP,2.5
C0160-8 C0450-8
BP,2.5D
GLOW PLUG 4 (T171)
C0450-2 C0160-2
BR,2.5
C0479-1
BY,2.5D
C
N,8.0D
SJ5
BG,2.5D
BR,2.5D
GLOW PLUG 1 (T171)
C0476-1
BG,2.5
C0160-9 C0450-9
GLOW PLUG 3 (T171)
C0450-3 C0160-3
BY,2.5
C0478-1
VWR004090-A-02
ENGINE CONTROL MODULE (ECM) (D131)
C0606-14
W,0.35
C0216-3
C0606-15
UY,0.35
C0216-1
C0606-16
NG,0.35
C0216-2
SENSOR-BOOST PRESSURE (T141)
C0606-35
WY,0.5
C1610-3
C0606-20
NG,0.5
C1610-1
C0606-33
UB,0.5
C1610-2
SENSOR-FUEL TANK PRESSURE (T189)
C0606-6
B,MQA
SCREEN CABLE (T169)
C0195-1
C0606-31
Y,MQA
C0195-2
C0606-19
C0195-3
SENSOR-ENGINE SPEED (T114)
C0606-32
NG,0.35
C0196-2
C0606-28
SU,0.35
C0196-1
SENSOR-ENGINE COOLANT TEMPERATURE (ECT) (T121)
C0606-41
NG,0.35
C0187-1
SWITCH-OIL PRESSURE (S216)
C0332-5
NW,2.5
C0522-2
RU,2.5
C0522-1
FUEL INJECTOR-NO. 1 (T172)
C0332-4
RU,2.5
MV1
RU,2.5
C0525-1
C0332-7
NW,2.5
C0525-2
FUEL INJECTOR-NO. 4 (T175)
C0332-3
NW,2.5
C0523-2
C0332-1
RU,2.5
MV2
RU,2.5
C0523-1
FUEL INJECTOR-NO. 2 (T173)
RU,2.5
C0524-1
C0332-9
NW,2.5
C0524-2
FUEL INJECTOR-NO. 3 (T174)

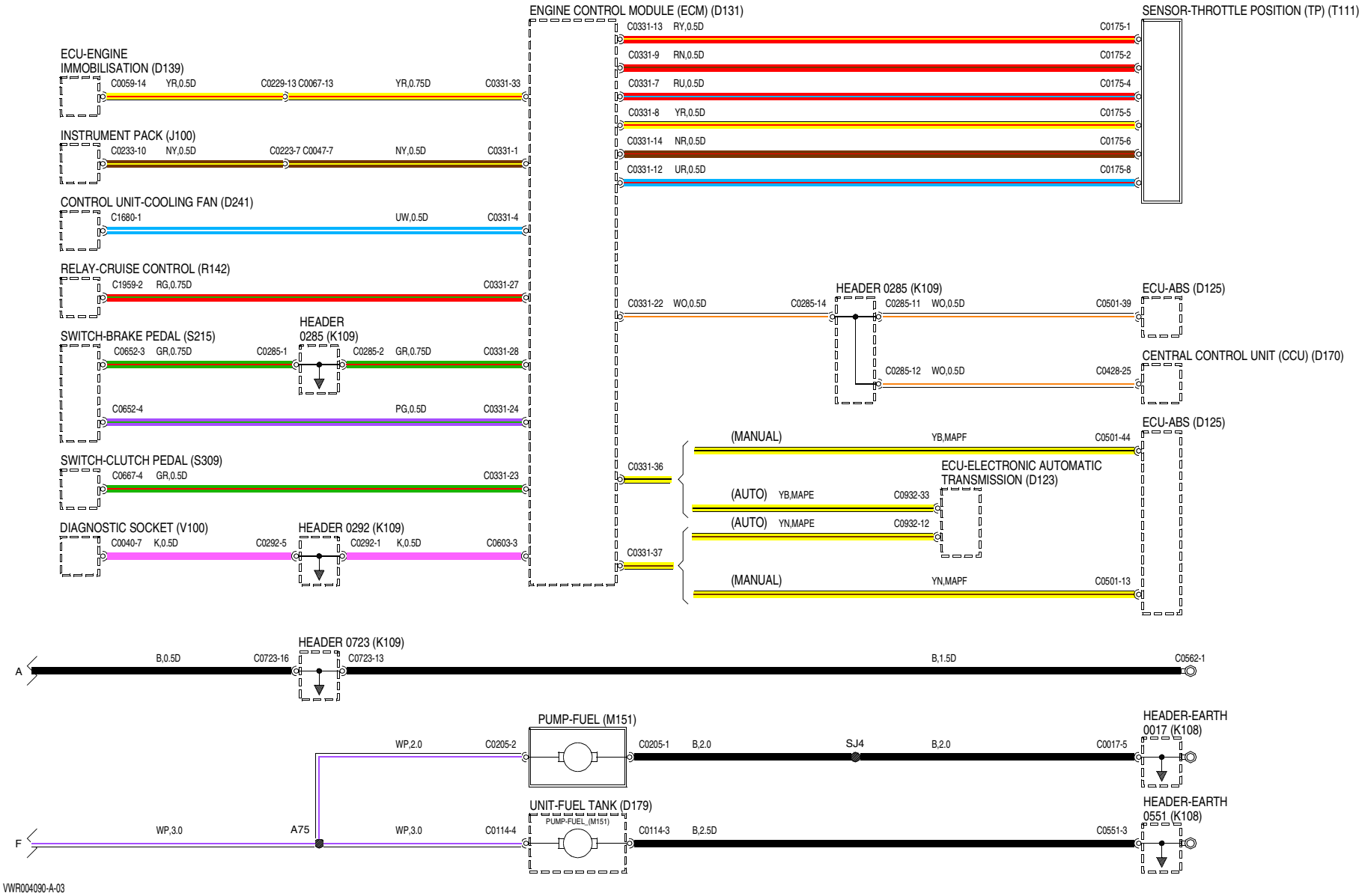
ENGINE CONTROL MODULE (ECM) (D131)
SENSOR-THROTTLE POSITION (TP) (T111)
C0331-13 RY,0.5D C0175-1
C0331-9 RN,0.5D C0175-2
C0331-7 RU,0.5D C0175-4
C0331-8 YR,0.5D C0175-5
C0331-14 NR,0.5D C0175-6
C0331-12 UR,0.5D C0175-8
ECU-ENGINE IMMOBILISATION (D139)
C0059-14 YR,0.5D C0229-13 C0067-13 YR,0.75D C0331-33
INSTRUMENT PACK (J100)
C0233-10 NY,0.5D C0223-7 C0047-7 NY,0.5D C0331-1
CONTROL UNIT-COOLING FAN (D241)
C1680-1 UW,0.5D C0331-4
RELAY-CRUISE CONTROL (R142)
C1959-2 RG,0.75D C0331-27
SWITCH-BRAKE PEDAL (S215)
HEADER 0285 (K109)
C0652-3 GR,0.75D C0285-1 C0285-2 GR,0.75D C0331-28
C0652-4 PG,0.5D C0331-24
SWITCH-CLUTCH PEDAL (S309)
C0667-4 GR,0.5D C0331-23
DIAGNOSTIC SOCKET (V100)
HEADER 0292 (K109)
C0040-7 K,0.5D C0292-5 C0292-1 K,0.5D C0603-3
HEADER 0285 (K109)
C0331-22 WO,0.5D C0285-14 C0285-11 WO,0.5D C0501-39
ECU-ABS (D125)
C0285-12 WO,0.5D C0428-25
CENTRAL CONTROL UNIT (CCU) (D170)
ECU-ABS (D125)
C0331-36
(MANUAL) YB,MAPF C0501-44
ECU-ELECTRONIC AUTOMATIC TRANSMISSION (D123)
(AUTO) YB,MAPE C0932-33
(AUTO) YN,MAPE C0932-12
C0331-37
(MANUAL) YN,MAPF C0501-13
HEADER 0723 (K109)
A
B,0.5D C0723-16 C0723-13 B,1.5D C0562-1
PUMP-FUEL (M151)
WP,2.0 C0205-2 C0205-1 B,2.0 SJ4 B,2.0 C0017-5
HEADER-EARTH 0017 (K108)
UNIT-FUEL TANK (D179)
PUMP-FUEL (M151)
F
WP,3.0 A75 WP,3.0 C0114-4 C0114-3 B,2.5D C0551-3
HEADER-EARTH 0551 (K108)
VWR004090-A-03

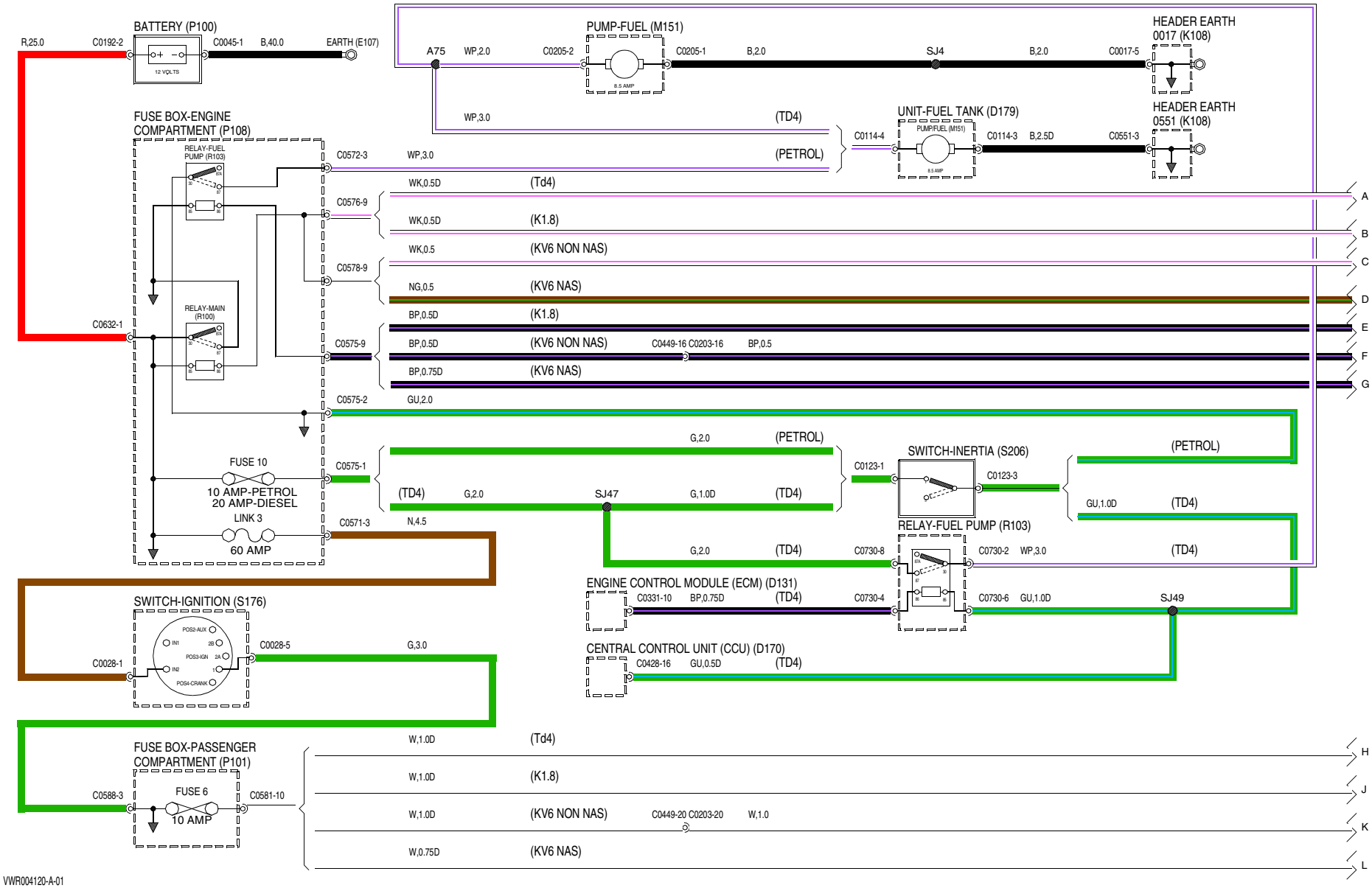
BATTERY (P100)
12 VOLTS
R,25.0
C0192-2
C0045-1
B,40.0
EARTH (E107)
PUMP-FUEL (M151)
8.5 AMP
A75
WP,2.0
C0205-2
C0205-1
B,2.0
SJ4
B,2.0
C0017-5
HEADER EARTH
0017 (K108)
HEADER EARTH
0551 (K108)
UNIT-FUEL TANK (D179)
PUMP/FUEL (M151)
C0114-4
C0114-3
B,2.5D
C0551-3
WP,3.0
(TD4)
(PETROL)
FUSE BOX-ENGINE
COMPARTMENT (P108)
RELAY-FUEL
PUMP (R103)
RELAY-MAIN
(R100)
C0632-1
C0572-3
WP,3.0
C0576-9
WK,0.5D
(Td4)
(K1.8)
C0578-9
WK,0.5
(KV6 NON NAS)
NG,0.5
(KV6 NAS)
C0575-9
BP,0.5D
BP,0.75D
C0449-16 C0203-16
BP,0.5
C0575-2
GU,2.0
C0575-1
G,2.0
SJ47
G,1.0D
FUSE 10
10 AMP-PETROL
20 AMP-DIESEL
LINK 3
60 AMP
C0571-3
N,4.5
SWITCH-INERTIA (S206)
C0123-1
C0123-3
GU,1.0D
RELAY-FUEL PUMP (R103)
C0730-8
C0730-2
C0730-6
C0730-4
ENGINE CONTROL MODULE (ECM) (D131)
C0331-10
BP,0.75D
CENTRAL CONTROL UNIT (CCU) (D170)
C0428-16
GU,0.5D
SJ49
SWITCH-IGNITION (S176)
POS2-AUX
POS3-IGN
POS4-CRANK
C0028-1
C0028-5
G,3.0
FUSE BOX-PASSENGER
COMPARTMENT (P101)
C0588-3
FUSE 6
10 AMP
C0581-10
W,1.0D
W,0.75D
C0449-20 C0203-20
W,1.0
A
B
C
D
E
F
G
H
J
K
L
VWR004120-A-01

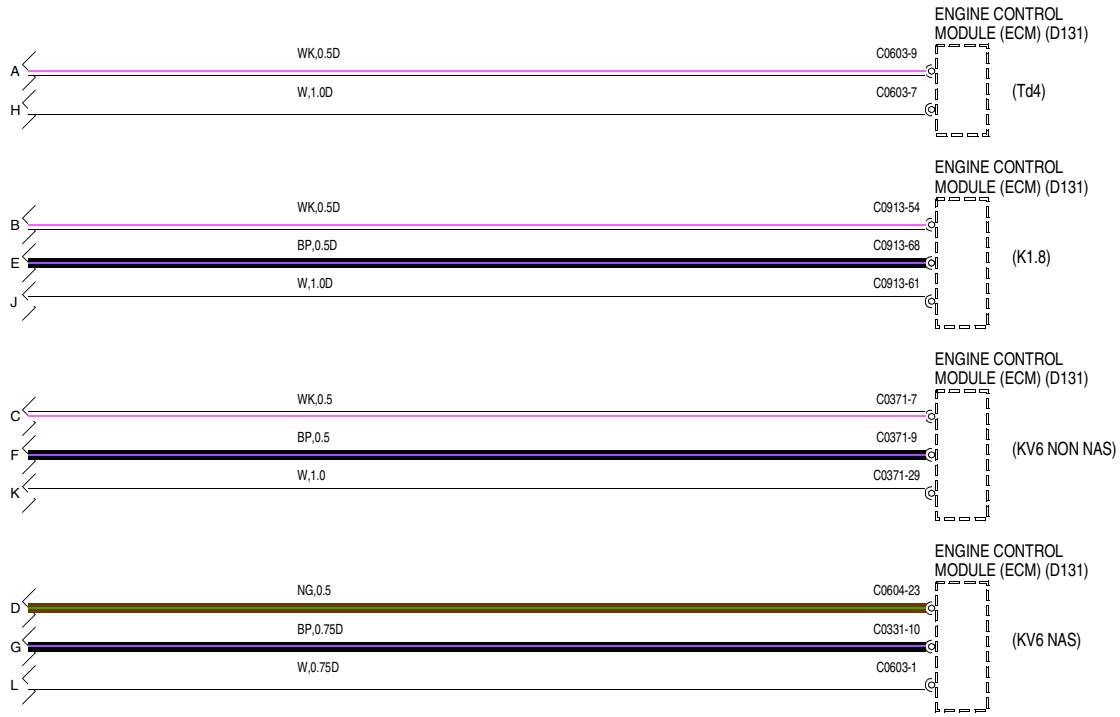

VWR004120-A-02

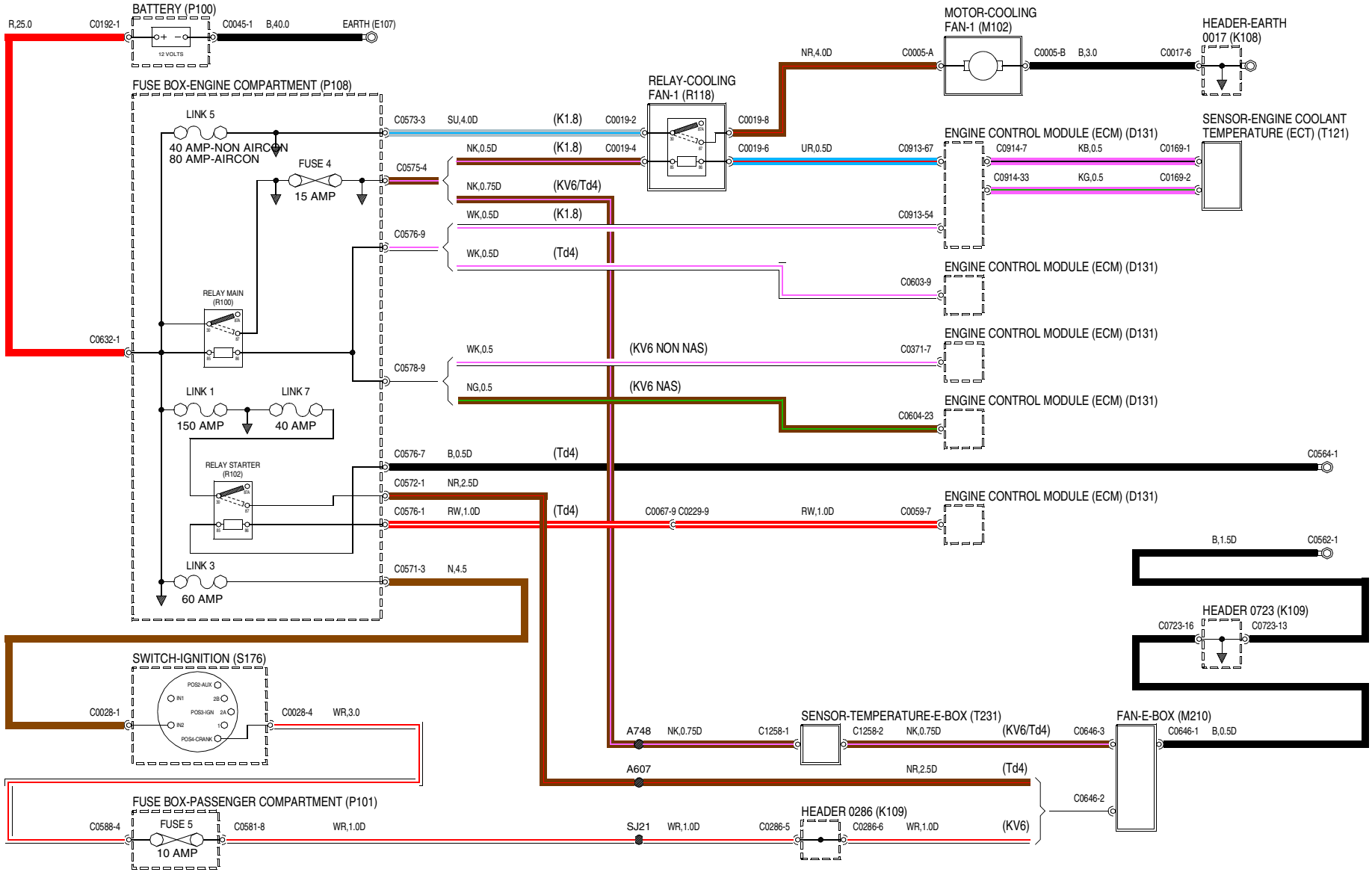
BATTERY (P100)
R,25.0
C0192-1
12 VOLTS
C0045-1
B,40.0
EARTH (E107)
MOTOR-COOLING FAN-1 (M102)
NR,4.0D
C0005-A
C0005-B
B,3.0
C0017-6
HEADER-EARTH 0017 (K108)
FUSE BOX-ENGINE COMPARTMENT (P108)
LINK 5
40 AMP-NON AIRCON
80 AMP-AIRCON
FUSE 4
15 AMP
RELAY-COOLING FAN-1 (R118)
C0573-3
SU,4.0D
(K1.8)
C0019-2
C0019-8
C0019-4
C0019-6
UR,0.5D
C0913-67
ENGINE CONTROL MODULE (ECM) (D131)
SENSOR-ENGINE COOLANT TEMPERATURE (ECT) (T121)
C0914-7
KB,0.5
C0169-1
C0914-33
KG,0.5
C0169-2
C0575-4
NK,0.5D
NK,0.75D
(KV6/Td4)
WK,0.5D
C0913-54
C0576-9
WK,0.5D
(Td4)
C0603-9
RELAY MAIN (R100)
C0632-1
WK,0.5
(KV6 NON NAS)
C0371-7
C0578-9
NG,0.5
(KV6 NAS)
C0604-23
LINK 1
150 AMP
LINK 7
40 AMP
C0576-7
B,0.5D
C0564-1
RELAY STARTER (R102)
C0572-1
NR,2.5D
C0576-1
RW,1.0D
C0067-9 C0229-9
C0059-7
B,1.5D
C0562-1
LINK 3
60 AMP
C0571-3
N,4.5
HEADER 0723 (K109)
C0723-16
C0723-13
SWITCH-IGNITION (S176)
POS2-AUX
IN1
2B
POS3-IGN
2A
IN2
1
POS4-CRANK
C0028-1
C0028-4
WR,3.0
SENSOR-TEMPERATURE-E-BOX (T231)
FAN-E-BOX (M210)
A748
NK,0.75D
C1258-1
C1258-2
C0646-3
C0646-1
B,0.5D
A607
NR,2.5D
C0646-2
FUSE BOX-PASSENGER COMPARTMENT (P101)
C0588-4
FUSE 5
10 AMP
C0581-8
WR,1.0D
SJ21
C0286-5
HEADER 0286 (K109)
C0286-6
(KV6)
VWR004020-A-01

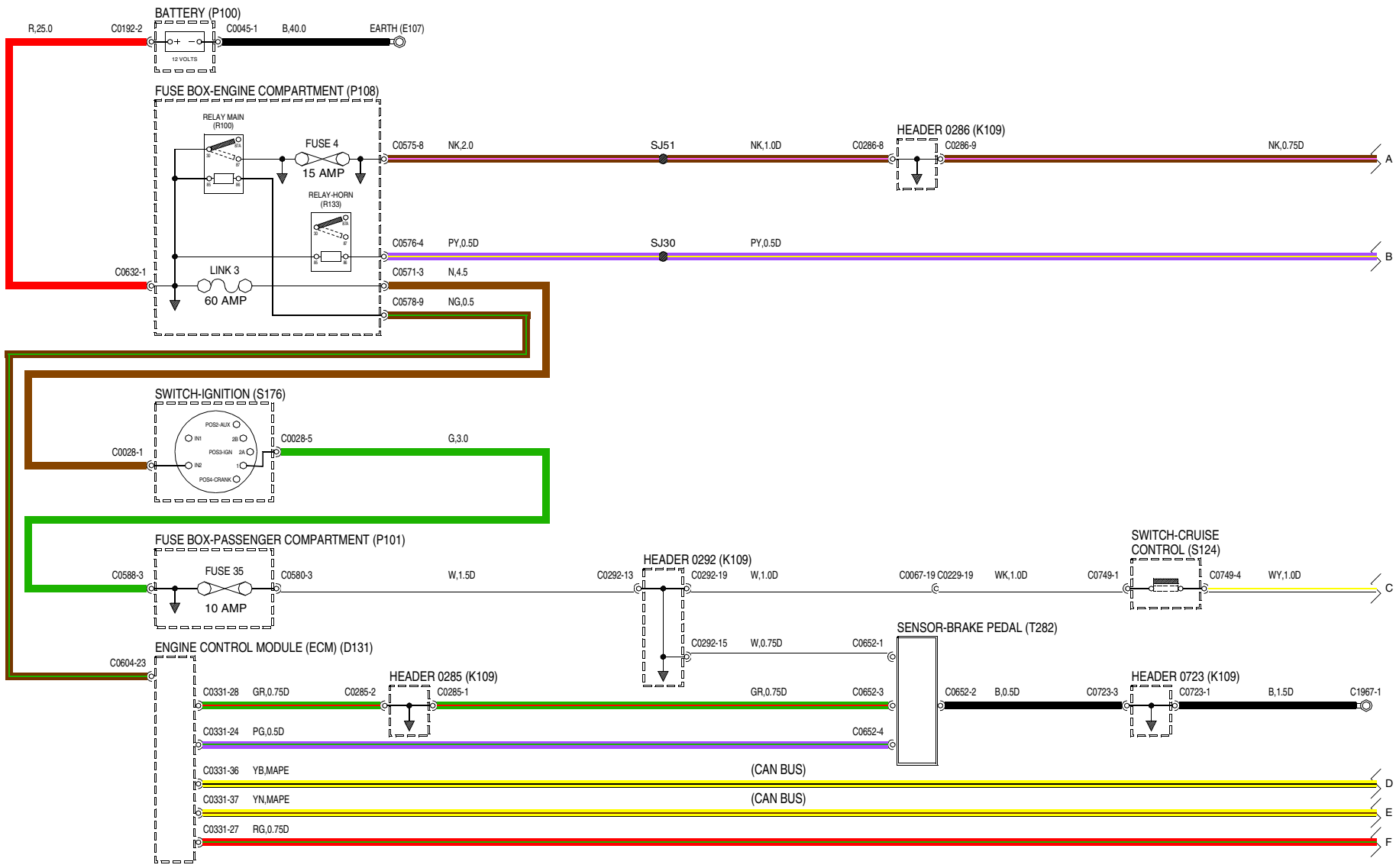
BATTERY (P100)
R,25.0
C0192-2
C0045-1
B,40.0
EARTH (E107)
12 VOLTS
FUSE BOX-ENGINE COMPARTMENT (P108)
RELAY MAIN (R100)
FUSE 4
15 AMP
RELAY-HORN (R133)
C0575-8
NK,2.0
SJ51
NK,1.0D
C0286-8
HEADER 0286 (K109)
C0286-9
NK,0.75D
A
C0576-4
PY,0.5D
SJ30
PY,0.5D
B
C0632-1
LINK 3
60 AMP
C0571-3
N,4.5
C0578-9
NG,0.5
SWITCH-IGNITION (S176)
POS2-AUX
IN1
2B
POS3-IGN
2A
IN2
1
POS4-CRANK
C0028-1
C0028-5
G,3.0
FUSE BOX-PASSENGER COMPARTMENT (P101)
C0588-3
FUSE 35
10 AMP
C0580-3
W,1.5D
C0292-13
HEADER 0292 (K109)
C0292-19
W,1.0D
C0067-19
C0229-19
WK,1.0D
C0749-1
SWITCH-CRUISE CONTROL (S124)
C0749-4
WY,1.0D
C
C0292-15
W,0.75D
C0652-1
SENSOR-BRAKE PEDAL (T282)
ENGINE CONTROL MODULE (ECM) (D131)
C0604-23
C0331-28
GR,0.75D
C0285-2
HEADER 0285 (K109)
C0285-1
GR,0.75D
C0652-3
C0652-2
B,0.5D
C0723-3
HEADER 0723 (K109)
C0723-1
B,1.5D
C1967-1
C0331-24
PG,0.5D
C0652-4
C0331-36
YB,MAPE
(CAN BUS)
D
C0331-37
YN,MAPE
(CAN BUS)
E
C0331-27
RG,0.75D
F
VWR004030-A-01

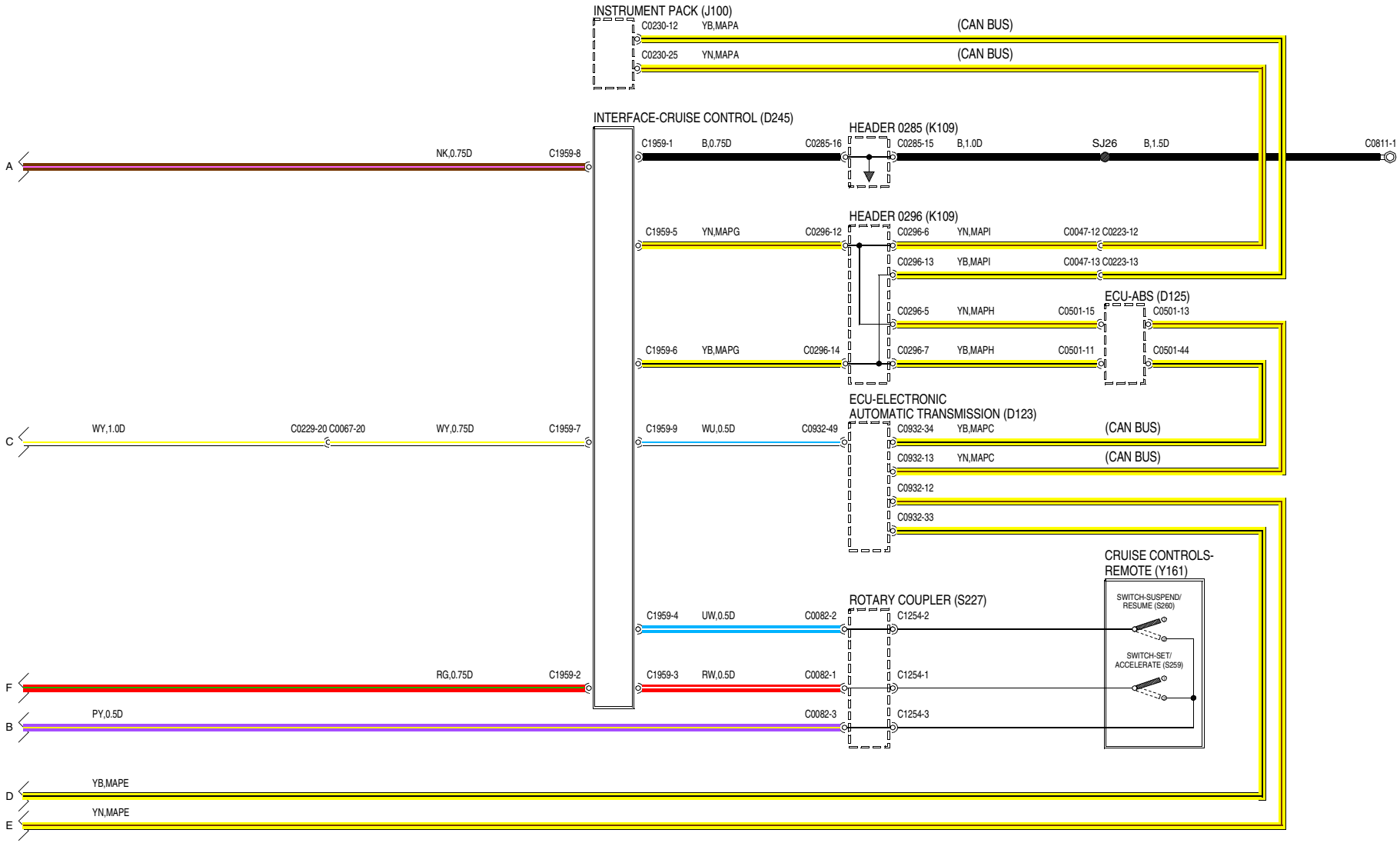

VWR004030-A-02

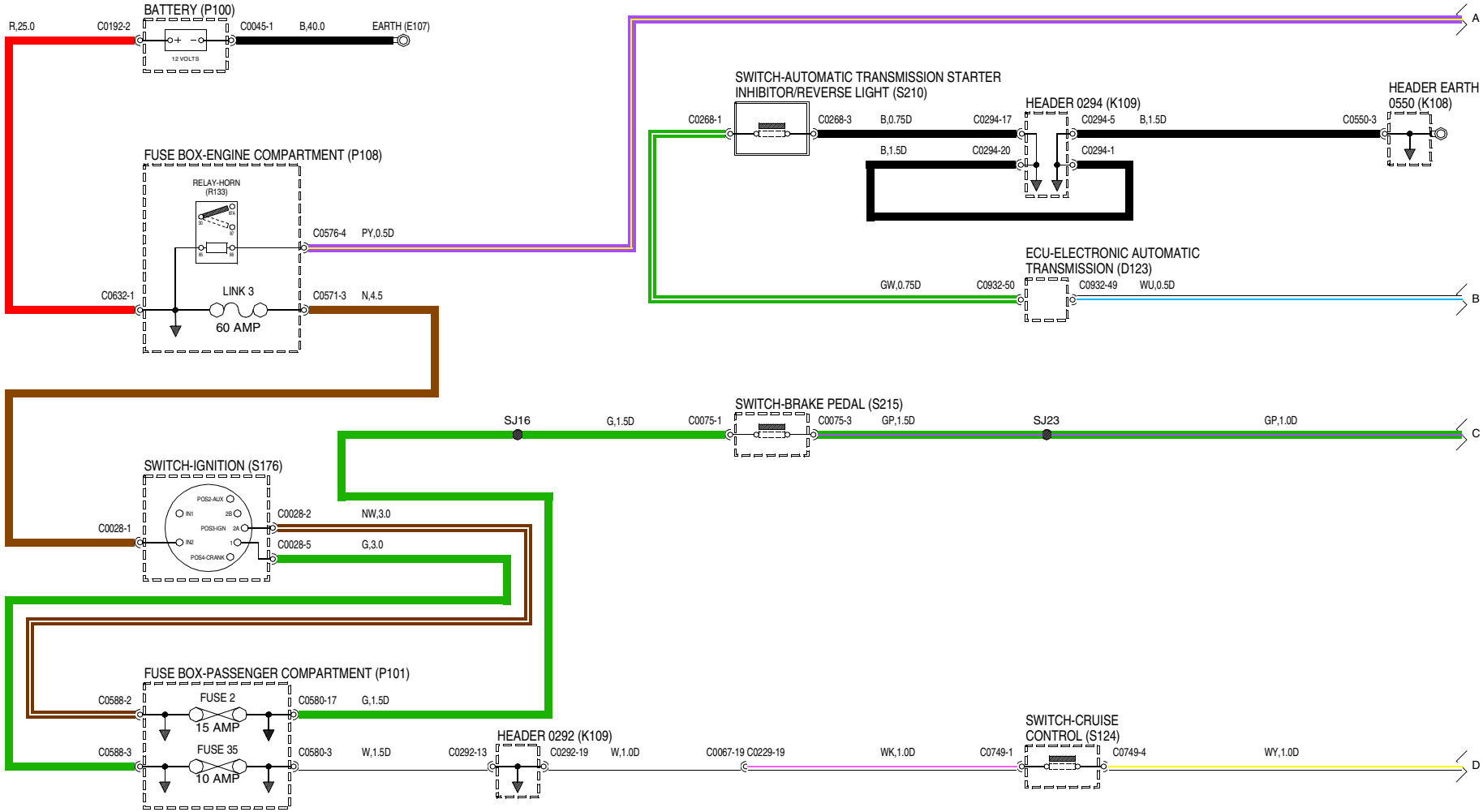

VWR004040-A-01

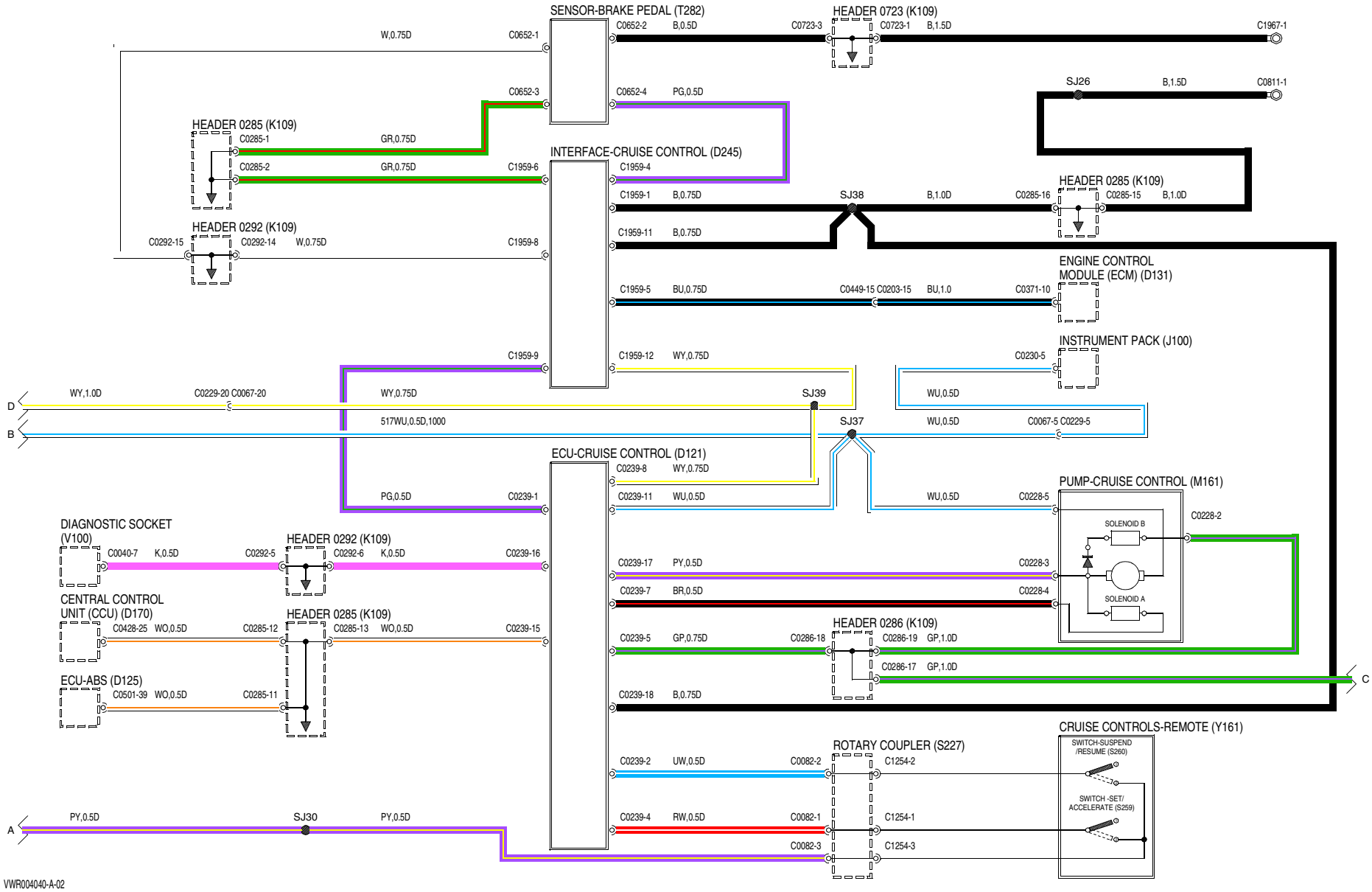
SENSOR-BRAKE PEDAL (T282)
HEADER 0723 (K109)
C0652-2 B,0.5D C0723-3 C0723-1 B,1.5D C1967-1
W,0.75D C0652-1
C0652-3 C0652-4 PG,0.5D
SJ26 B,1.5D C0811-1
HEADER 0285 (K109)
C0285-1 GR,0.75D
C0285-2 GR,0.75D C1959-6
INTERFACE-CRUISE CONTROL (D245)
C1959-4
C1959-1 B,0.75D SJ38 B,1.0D C0285-16 C0285-15 B,1.0D
HEADER 0285 (K109)
HEADER 0292 (K109)
C0292-15 C0292-14 W,0.75D C1959-8
C1959-11 B,0.75D
ENGINE CONTROL MODULE (ECM) (D131)
C1959-5 BU,0.75D C0449-15 C0203-15 BU,1.0 C0371-10
INSTRUMENT PACK (J100)
C1959-9 C1959-12 WY,0.75D C0230-5
D WY,1.0D C0229-20 C0067-20 WY,0.75D SJ39 WU,0.5D
B 517WU,0.5D,1000 SJ37 WU,0.5D C0067-5 C0229-5
ECU-CRUISE CONTROL (D121)
C0239-8 WY,0.75D
PUMP-CRUISE CONTROL (M161)
PG,0.5D C0239-1 C0239-11 WU,0.5D WU,0.5D C0228-5
C0228-2
SOLENOID B
SOLENOID A
DIAGNOSTIC SOCKET (V100)
C0040-7 K,0.5D C0292-5 HEADER 0292 (K109) C0292-6 K,0.5D C0239-16
C0239-17 PY,0.5D C0228-3
C0239-7 BR,0.5D C0228-4
CENTRAL CONTROL UNIT (CCU) (D170)
C0428-25 WO,0.5D C0285-12 HEADER 0285 (K109) C0285-13 WO,0.5D C0239-15
HEADER 0286 (K109)
C0239-5 GP,0.75D C0286-18 C0286-19 GP,1.0D
C0286-17 GP,1.0D
C
ECU-ABS (D125)
C0501-39 WO,0.5D C0285-11
C0239-18 B,0.75D
CRUISE CONTROLS-REMOTE (Y161)
ROTARY COUPLER (S227)
SWITCH-SUSPEND /RESUME (S260)
C0239-2 UW,0.5D C0082-2 C1254-2
SWITCH -SET/ ACCELERATE (S259)
A PY,0.5D SJ30 PY,0.5D C0239-4 RW,0.5D C0082-1 C1254-1
C0082-3 C1254-3
VWR004040-A-02

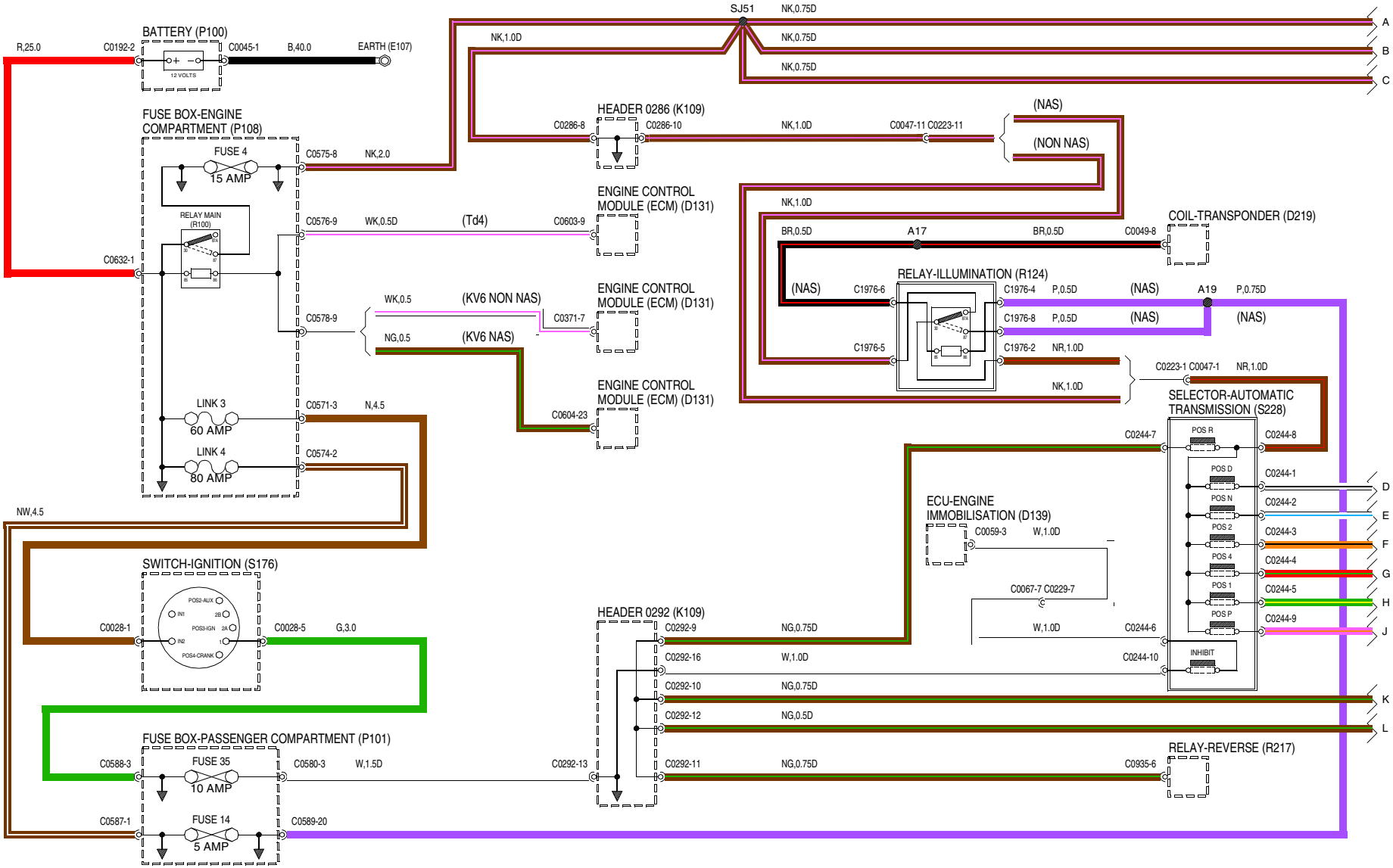

VWR004350-A-01

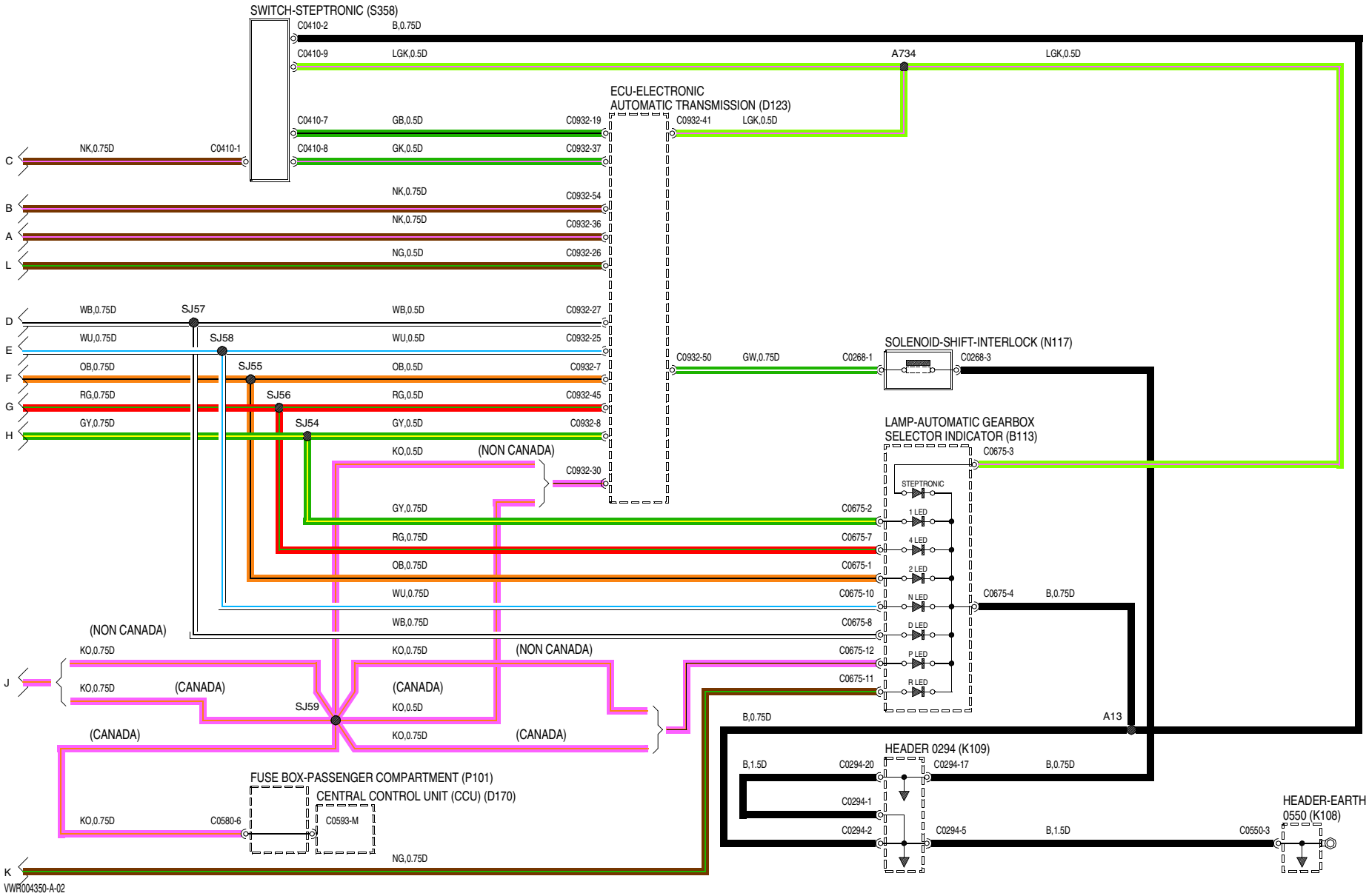
SWITCH-STEPTRONIC (S358)
C0410-2
B,0.75D
C0410-9
LGK,0.5D
A734
LGK,0.5D
ECU-ELECTRONIC
AUTOMATIC TRANSMISSION (D123)
C0410-7
GB,0.5D
C0932-19
C0932-41
LGK,0.5D
C0410-8
GK,0.5D
C0932-37
C
NK,0.75D
C0410-1
B
NK,0.75D
C0932-54
A
NK,0.75D
C0932-36
L
NG,0.5D
C0932-26
D
WB,0.75D
SJ57
WB,0.5D
C0932-27
E
WU,0.75D
SJ58
WU,0.5D
C0932-25
F
OB,0.75D
SJ55
OB,0.5D
C0932-7
G
RG,0.75D
SJ56
RG,0.5D
C0932-45
H
GY,0.75D
SJ54
GY,0.5D
C0932-8
C0932-50
GW,0.75D
C0268-1
SOLENOID-SHIFT-INTERLOCK (N117)
C0268-3
LAMP-AUTOMATIC GEARBOX
SELECTOR INDICATOR (B113)
C0675-3
KO,0.5D
(NON CANADA)
C0932-30
STEPTRONIC
GY,0.75D
C0675-2
1 LED
RG,0.75D
C0675-7
4 LED
OB,0.75D
C0675-1
2 LED
WU,0.75D
C0675-10
N LED
C0675-4
B,0.75D
WB,0.75D
C0675-8
D LED
(NON CANADA)
KO,0.75D
KO,0.75D
(NON CANADA)
C0675-12
P LED
J
KO,0.75D
(CANADA)
(CANADA)
C0675-11
R LED
SJ59
KO,0.5D
B,0.75D
A13
(CANADA)
KO,0.75D
(CANADA)
HEADER 0294 (K109)
B,1.5D
C0294-20
C0294-17
B,0.75D
FUSE BOX-PASSENGER COMPARTMENT (P101)
CENTRAL CONTROL UNIT (CCU) (D170)
C0294-1
HEADER-EARTH
0550 (K108)
KO,0.75D
C0580-6
C0593-M
C0294-2
C0294-5
B,1.5D
C0550-3
K
NG,0.75D
VWF004350-A-02

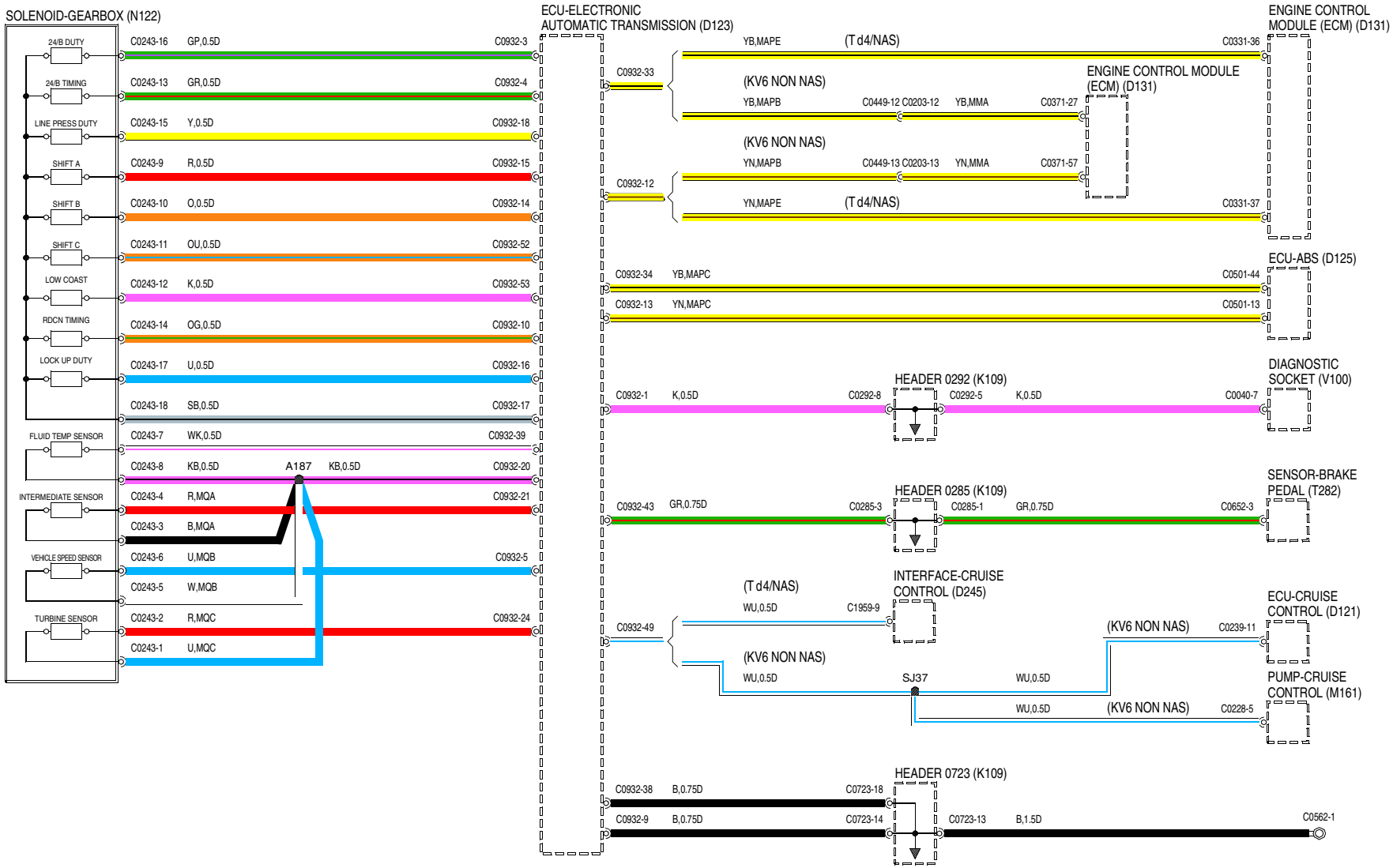
SOLENOID-GEARBOX (N122)
24/B DUTY
24/B TIMING
LINE PRESS DUTY
SHIFT A
SHIFT B
SHIFT C
LOW COAST
RDCN TIMING
LOCK UP DUTY
FLUID TEMP SENSOR
INTERMEDIATE SENSOR
VEHICLE SPEED SENSOR
TURBINE SENSOR
C0243-16 GP,0.5D C0932-3
C0243-13 GR,0.5D C0932-4
C0243-15 Y,0.5D C0932-18
C0243-9 R,0.5D C0932-15
C0243-10 O,0.5D C0932-14
C0243-11 OU,0.5D C0932-52
C0243-12 K,0.5D C0932-53
C0243-14 OG,0.5D C0932-10
C0243-17 U,0.5D C0932-16
C0243-18 SB,0.5D C0932-17
C0243-7 WK,0.5D C0932-39
C0243-8 KB,0.5D A187 KB,0.5D C0932-20
C0243-4 R,MQA C0932-21
C0243-3 B,MQA
C0243-6 U,MQB C0932-5
C0243-5 W,MQB
C0243-2 R,MQC C0932-24
C0243-1 U,MQC
ECU-ELECTRONIC AUTOMATIC TRANSMISSION (D123)
ENGINE CONTROL MODULE (ECM) (D131)
C0932-33
YB,MAPE (T d4/NAS) C0331-36
(KV6 NON NAS)
YB,MAPB C0449-12 C0203-12 YB,MMA C0371-27
ENGINE CONTROL MODULE (ECM) (D131)
(KV6 NON NAS)
YN,MAPB C0449-13 C0203-13 YN,MMA C0371-57
C0932-12
YN,MAPE (T d4/NAS) C0331-37
ECU-ABS (D125)
C0932-34 YB,MAPC C0501-44
C0932-13 YN,MAPC C0501-13
DIAGNOSTIC SOCKET (V100)
HEADER 0292 (K109)
C0932-1 K,0.5D C0292-8 C0292-5 K,0.5D C0040-7
SENSOR-BRAKE PEDAL (T282)
HEADER 0285 (K109)
C0932-43 GR,0.75D C0285-3 C0285-1 GR,0.75D C0652-3
INTERFACE-CRUISE CONTROL (D245)
(T d4/NAS)
WU,0.5D C1959-9
C0932-49
(KV6 NON NAS) C0239-11
ECU-CRUISE CONTROL (D121)
(KV6 NON NAS)
WU,0.5D SJ37 WU,0.5D
PUMP-CRUISE CONTROL (M161)
WU,0.5D (KV6 NON NAS) C0228-5
HEADER 0723 (K109)
C0932-38 B,0.75D C0723-18
C0932-9 B,0.75D C0723-14 C0723-13 B,1.5D C0562-1
VWR004350-A-03

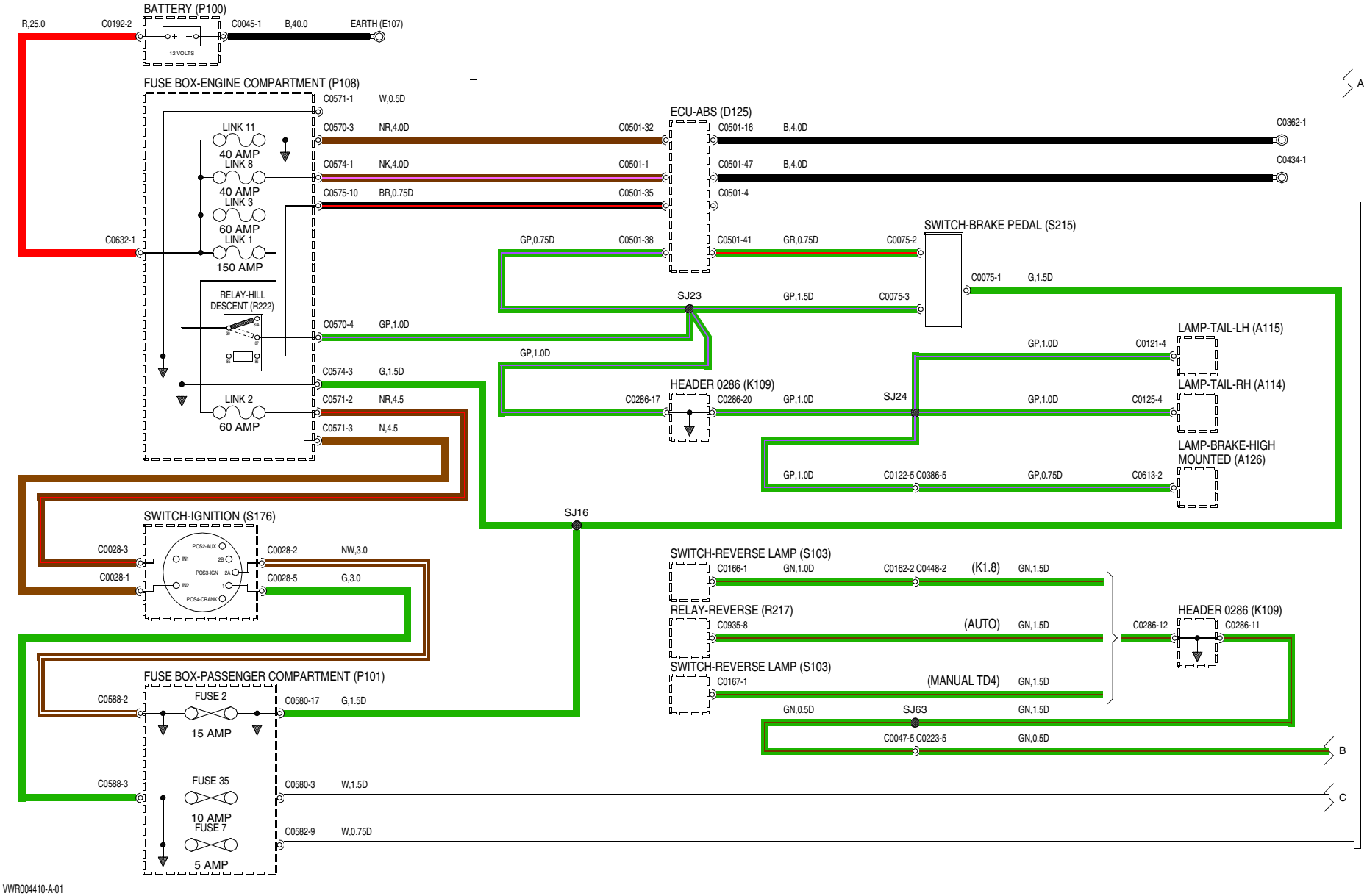
BATTERY (P100)
R,25.0
C0192-2
12 VOLTS
C0045-1
B,40.0
EARTH (E107)
FUSE BOX-ENGINE COMPARTMENT (P108)
C0571-1
W,0.5D
LINK 11
40 AMP
LINK 8
40 AMP
LINK 3
60 AMP
LINK 1
150 AMP
C0632-1
RELAY-HILL DESCENT (R222)
LINK 2
60 AMP
C0570-3
NR,4.0D
C0574-1
NK,4.0D
C0575-10
BR,0.75D
C0570-4
GP,1.0D
C0574-3
G,1.5D
C0571-2
NR,4.5
C0571-3
N,4.5
ECU-ABS (D125)
C0501-32
C0501-1
C0501-35
C0501-38
C0501-16
B,4.0D
C0362-1
C0501-47
B,4.0D
C0434-1
C0501-4
C0501-41
GR,0.75D
C0075-2
GP,0.75D
SWITCH-BRAKE PEDAL (S215)
C0075-1
G,1.5D
SJ23
GP,1.5D
C0075-3
GP,1.0D
LAMP-TAIL-LH (A115)
GP,1.0D
C0121-4
HEADER 0286 (K109)
C0286-17
C0286-20
GP,1.0D
SJ24
LAMP-TAIL-RH (A114)
GP,1.0D
C0125-4
LAMP-BRAKE-HIGH MOUNTED (A126)
GP,1.0D
C0122-5 C0386-5
GP,0.75D
C0613-2
SJ16
SWITCH-IGNITION (S176)
POS2-AUX
IN1
2B
POS3-IGN
2A
IN2
1
POS4-CRANK
C0028-3
C0028-1
C0028-2
NW,3.0
C0028-5
G,3.0
SWITCH-REVERSE LAMP (S103)
C0166-1
GN,1.0D
C0162-2 C0448-2
(K1.8)
GN,1.5D
RELAY-REVERSE (R217)
C0935-8
(AUTO)
GN,1.5D
C0286-12
HEADER 0286 (K109)
C0286-11
SWITCH-REVERSE LAMP (S103)
C0167-1
(MANUAL TD4)
GN,1.5D
GN,0.5D
SJ63
GN,1.5D
C0047-5 C0223-5
GN,0.5D
FUSE BOX-PASSENGER COMPARTMENT (P101)
C0588-2
FUSE 2
15 AMP
C0580-17
G,1.5D
C0588-3
FUSE 35
10 AMP
C0580-3
W,1.5D
FUSE 7
5 AMP
C0582-9
W,0.75D
A
B
C
VWR004410-A-01

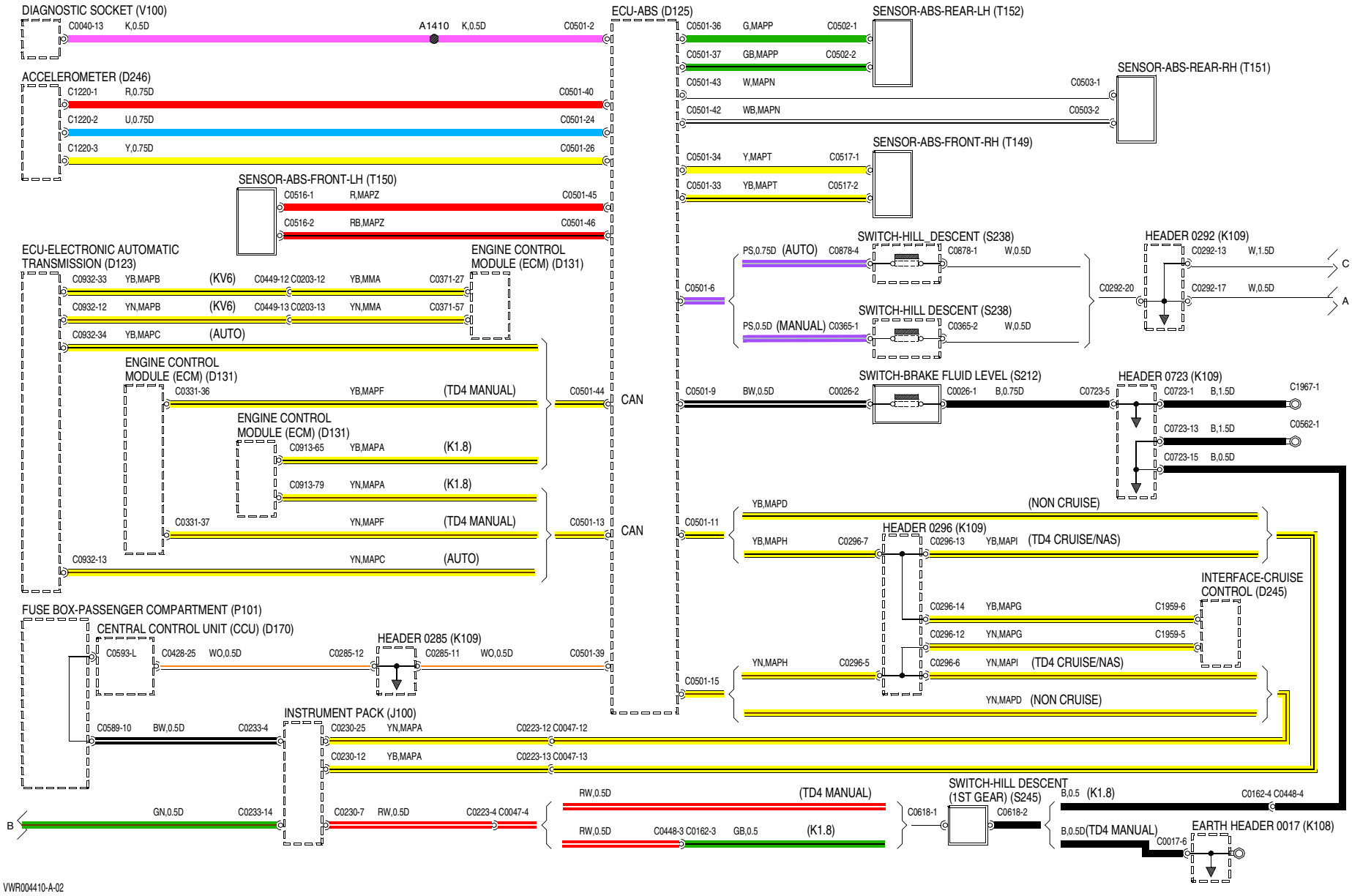
DIAGNOSTIC SOCKET (V100)
C0040-13 K,0.5D A1410 K,0.5D C0501-2
ACCELEROMETER (D246)
C1220-1 R,0.75D C0501-40
C1220-2 U,0.75D C0501-24
C1220-3 Y,0.75D C0501-26
SENSOR-ABS-FRONT-LH (T150)
C0516-1 R,MAPZ C0501-45
C0516-2 RB,MAPZ C0501-46
ECU-ELECTRONIC AUTOMATIC TRANSMISSION (D123)
C0932-33 YB,MAPB (KV6) C0449-12 C0203-12 YB,MMA C0371-27
C0932-12 YN,MAPB (KV6) C0449-13 C0203-13 YN,MMA C0371-57
C0932-34 YB,MAPC (AUTO)
ENGINE CONTROL MODULE (ECM) (D131)
C0331-36 YB,MAPF (TD4 MANUAL)
ENGINE CONTROL MODULE (ECM) (D131)
C0913-65 YB,MAPA (K1.8)
C0913-79 YN,MAPA (K1.8)
C0331-37 YN,MAPF (TD4 MANUAL)
C0932-13 YN,MAPC (AUTO)
ENGINE CONTROL MODULE (ECM) (D131)
C0501-44
C0501-13
CAN
CAN
ECU-ABS (D125)
FUSE BOX-PASSENGER COMPARTMENT (P101)
CENTRAL CONTROL UNIT (CCU) (D170)
C0593-L C0428-25 WO,0.5D C0285-12
HEADER 0285 (K109)
C0285-11 WO,0.5D C0501-39
INSTRUMENT PACK (J100)
C0589-10 BW,0.5D C0233-4
C0230-25 YN,MAPA C0223-12 C0047-12
C0230-12 YB,MAPA C0223-13 C0047-13
B
GN,0.5D C0233-14
C0230-7 RW,0.5D C0223-4 C0047-4
C0501-36 G,MAPP C0502-1
C0501-37 GB,MAPP C0502-2
SENSOR-ABS-REAR-LH (T152)
C0501-43 W,MAPN C0503-1
C0501-42 WB,MAPN C0503-2
SENSOR-ABS-REAR-RH (T151)
C0501-34 Y,MAPT C0517-1
C0501-33 YB,MAPT C0517-2
SENSOR-ABS-FRONT-RH (T149)
C0501-6
PS,0.75D (AUTO) C0878-4
SWITCH-HILL DESCENT (S238)
C0878-1 W,0.5D
PS,0.5D (MANUAL) C0365-1
SWITCH-HILL DESCENT (S238)
C0365-2 W,0.5D
HEADER 0292 (K109)
C0292-13 W,1.5D
C0292-20
C0292-17 W,0.5D
C
A
C0501-9 BW,0.5D C0026-2
SWITCH-BRAKE FLUID LEVEL (S212)
C0026-1 B,0.75D C0723-5
HEADER 0723 (K109)
C0723-1 B,1.5D C1967-1
C0723-13 B,1.5D C0562-1
C0723-15 B,0.5D
C0501-11
YB,MAPD (NON CRUISE)
YB,MAPH C0296-7
HEADER 0296 (K109)
C0296-13 YB,MAPI (TD4 CRUISE/NAS)
INTERFACE-CRUISE CONTROL (D245)
C0296-14 YB,MAPG C1959-6
C0296-12 YN,MAPG C1959-5
YN,MAPH C0296-5
C0296-6 YN,MAPI (TD4 CRUISE/NAS)
C0501-15
YN,MAPD (NON CRUISE)
RW,0.5D (TD4 MANUAL)
RW,0.5D C0448-3 C0162-3 GB,0.5 (K1.8)
C0618-1
SWITCH-HILL DESCENT (1ST GEAR) (S245)
C0618-2
B,0.5 (K1.8) C0162-4 C0448-4
B,0.5D(TD4 MANUAL)
C0017-6
EARTH HEADER 0017 (K108)
VWR004410-A-02

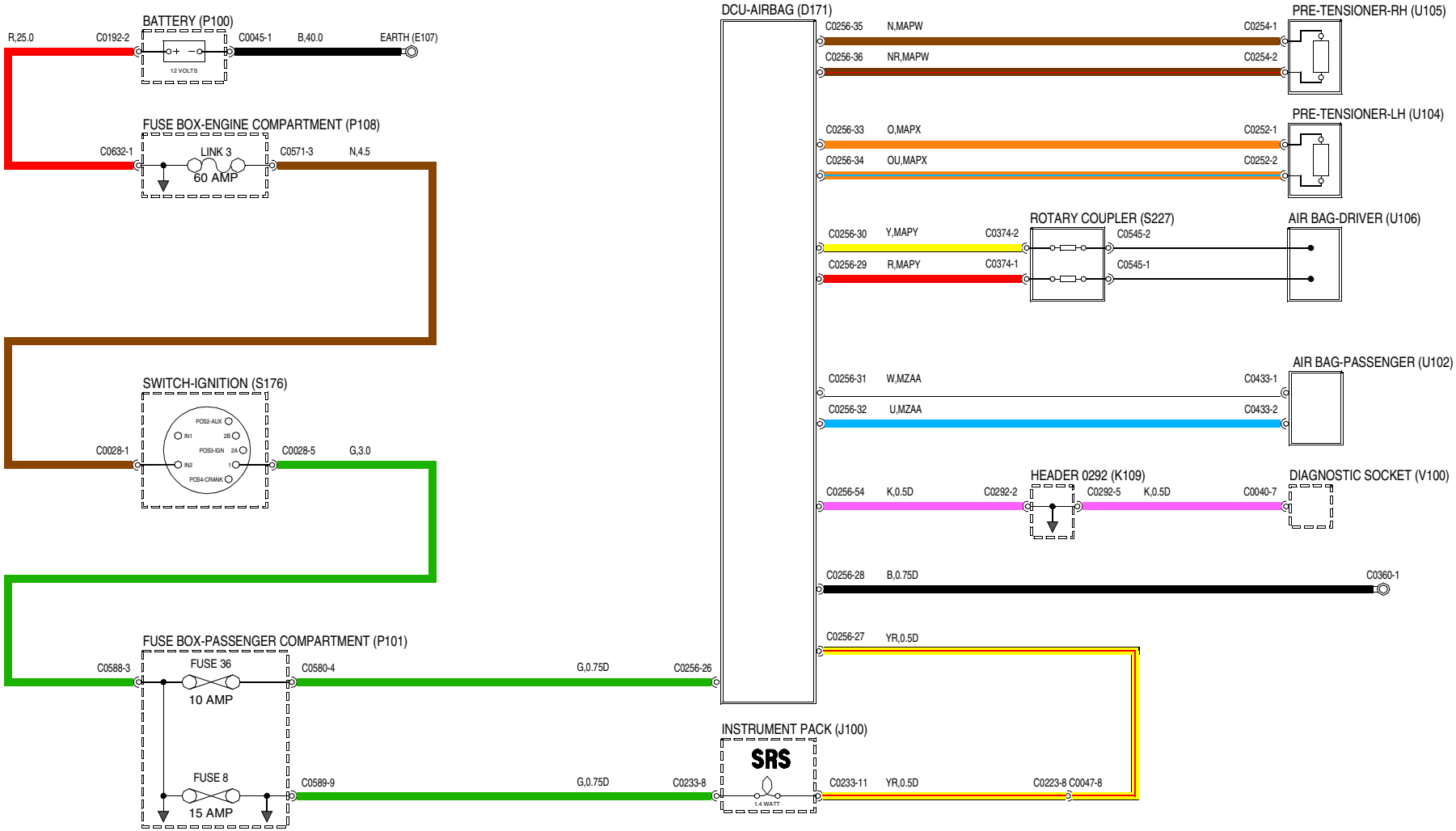

VWR004300-A-01

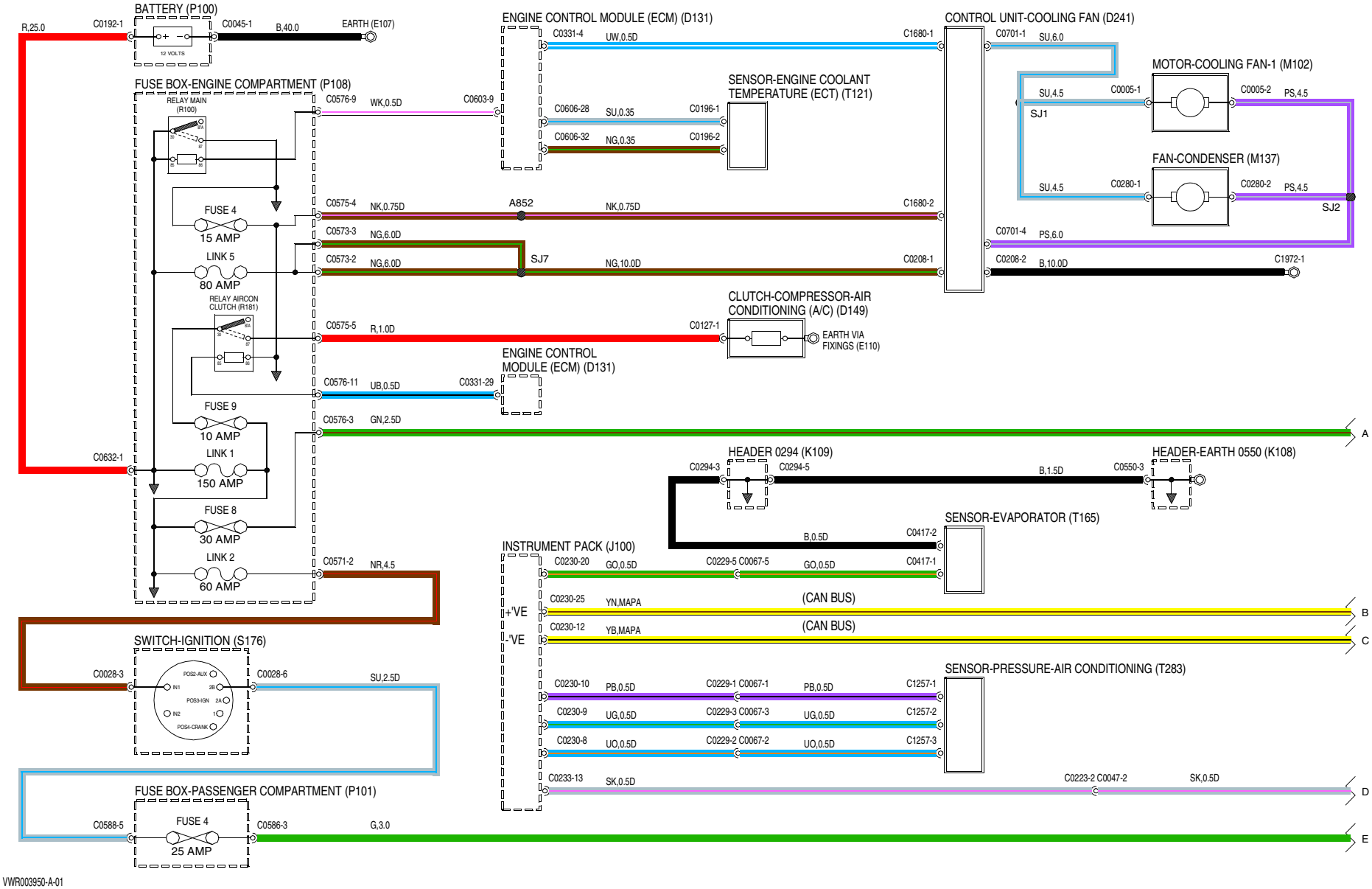
BATTERY (P100)
R,25.0
C0192-1
C0045-1
B,40.0
EARTH (E107)
12 VOLTS
FUSE BOX-ENGINE COMPARTMENT (P108)
RELAY MAIN (R100)
FUSE 4
15 AMP
LINK 5
80 AMP
RELAY AIRCON CLUTCH (R181)
FUSE 9
10 AMP
LINK 1
150 AMP
FUSE 8
30 AMP
LINK 2
60 AMP
C0632-1
C0576-9
WK,0.5D
C0603-9
C0575-4
NK,0.75D
A852
NK,0.75D
C0573-3
NG,6.0D
C0573-2
NG,6.0D
SJ7
NG,10.0D
C0575-5
R,1.0D
C0576-11
UB,0.5D
C0331-29
C0576-3
GN,2.5D
C0571-2
NR,4.5
ENGINE CONTROL MODULE (ECM) (D131)
C0331-4
UW,0.5D
C0606-28
SU,0.35
C0196-1
C0606-32
NG,0.35
C0196-2
SENSOR-ENGINE COOLANT TEMPERATURE (ECT) (T121)
CONTROL UNIT-COOLING FAN (D241)
C1680-1
C0701-1
SU,6.0
SU,4.5
C0005-1
MOTOR-COOLING FAN-1 (M102)
C0005-2
PS,4.5
SJ1
FAN-CONDENSER (M137)
C0280-1
C0280-2
SJ2
C1680-2
C0701-4
PS,6.0
C0208-1
C0208-2
B,10.0D
C1972-1
CLUTCH-COMPRESSOR-AIR CONDITIONING (A/C) (D149)
C0127-1
EARTH VIA FIXINGS (E110)
ENGINE CONTROL MODULE (ECM) (D131)
A
HEADER 0294 (K109)
C0294-3
C0294-5
B,1.5D
C0550-3
HEADER-EARTH 0550 (K108)
SENSOR-EVAPORATOR (T165)
B,0.5D
C0417-2
INSTRUMENT PACK (J100)
C0230-20
GO,0.5D
C0229-5 C0067-5
GO,0.5D
C0417-1
+'VE
C0230-25
YN,MAPA
(CAN BUS)
B
-'VE
C0230-12
YB,MAPA
(CAN BUS)
C
SENSOR-PRESSURE-AIR CONDITIONING (T283)
C0230-10
PB,0.5D
C0229-1 C0067-1
PB,0.5D
C1257-1
C0230-9
UG,0.5D
C0229-3 C0067-3
UG,0.5D
C1257-2
C0230-8
UO,0.5D
C0229-2 C0067-2
UO,0.5D
C1257-3
C0233-13
SK,0.5D
C0223-2 C0047-2
SK,0.5D
D
SWITCH-IGNITION (S176)
C0028-3
C0028-6
SU,2.5D
POS2-AUX
IN1
2B
POS3-IGN
2A
IN2
1
POS4-CRANK
FUSE BOX-PASSENGER COMPARTMENT (P101)
C0588-5
FUSE 4
25 AMP
C0586-3
G,3.0
E
VWR003950-A-01

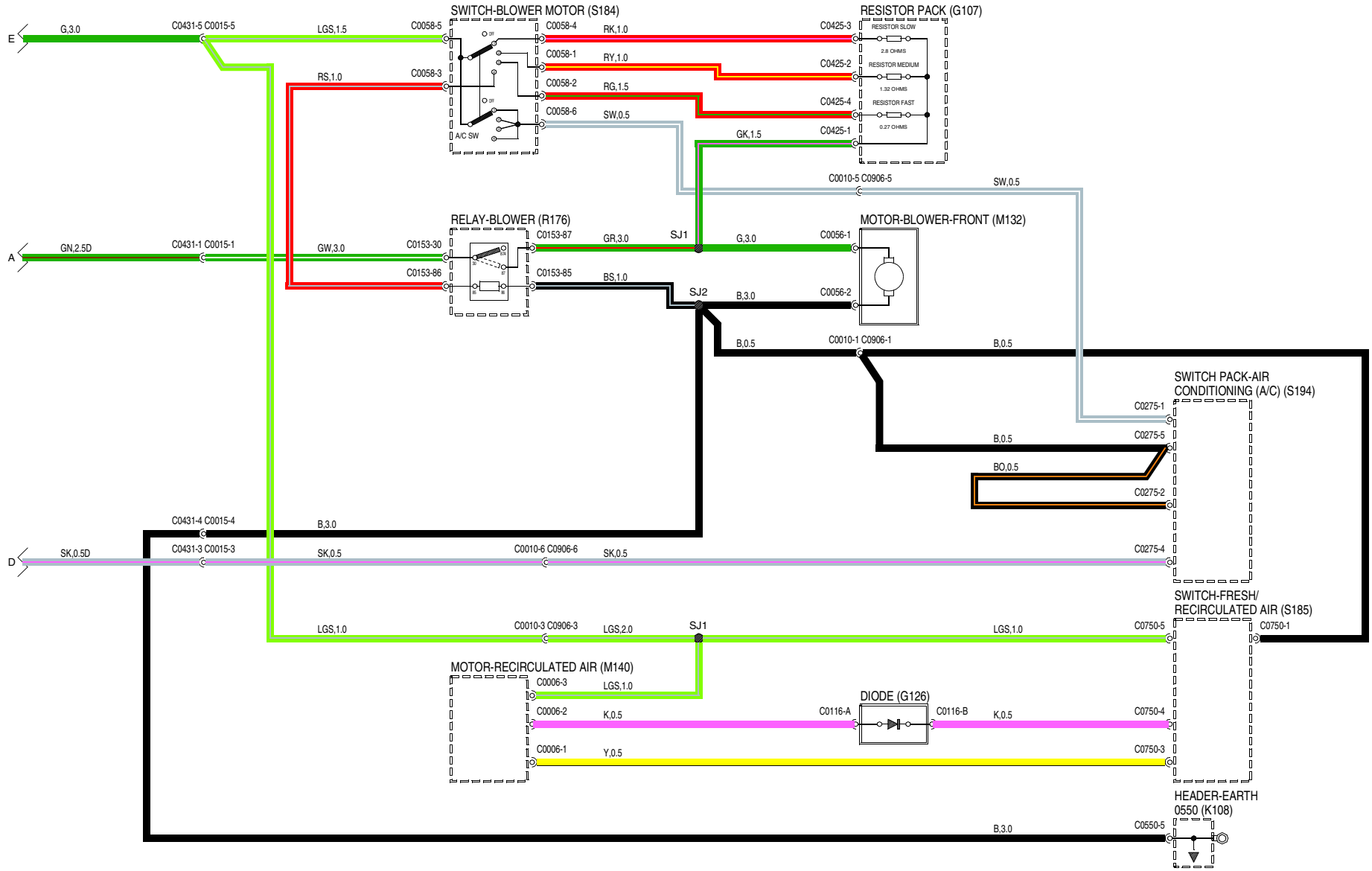

VWR003950-A-02

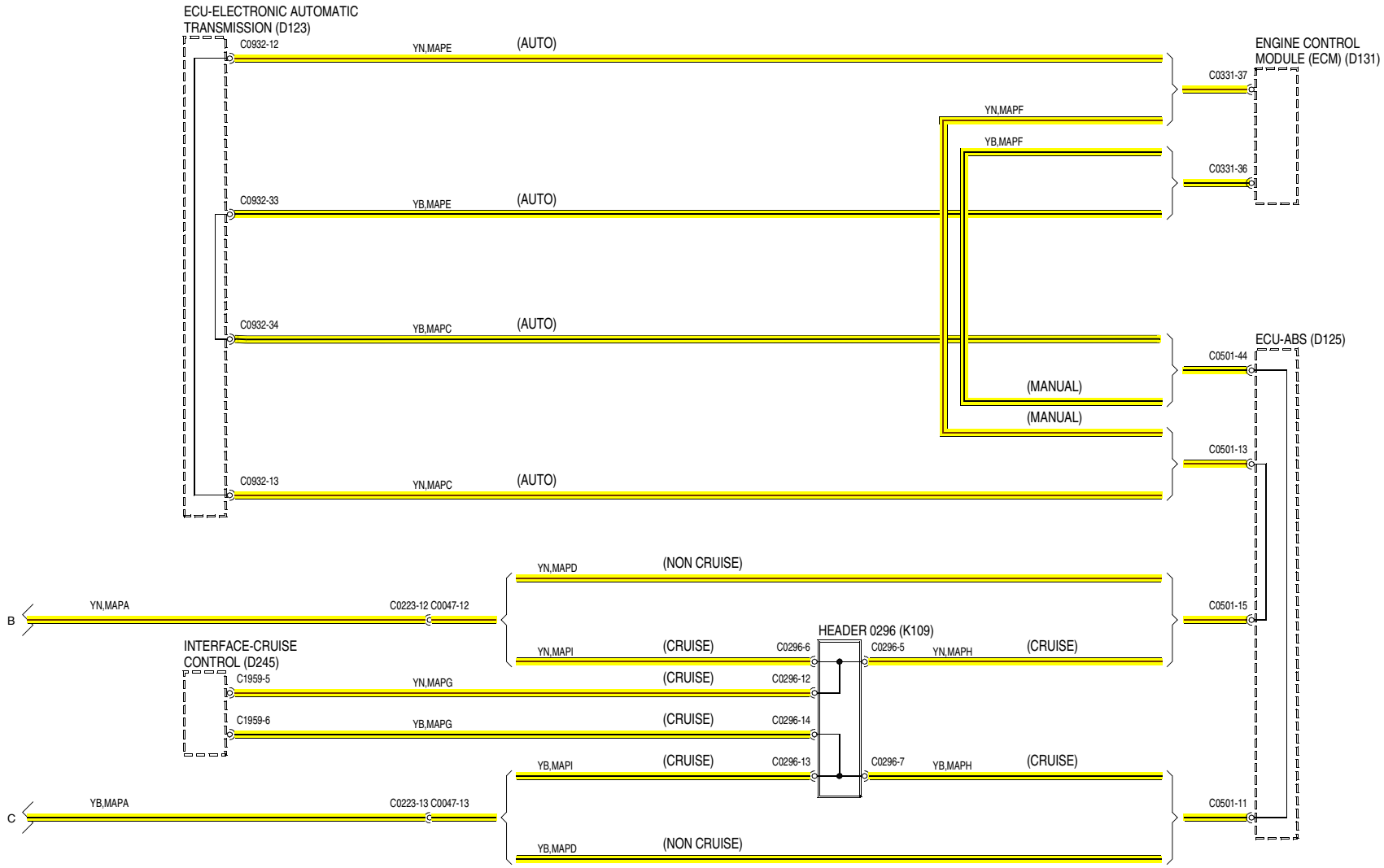
ECU-ELECTRONIC AUTOMATIC TRANSMISSION (D123)
C0932-12
YN,MAPE
(AUTO)
ENGINE CONTROL MODULE (ECM) (D131)
C0331-37
YN,MAPF
YB,MAPF
C0331-36
C0932-33
YB,MAPE
(AUTO)
C0932-34
YB,MAPC
(AUTO)
ECU-ABS (D125)
C0501-44
(MANUAL)
(MANUAL)
C0501-13
C0932-13
YN,MAPC
(AUTO)
YN,MAPD
(NON CRUISE)
B
YN,MAPA
C0223-12 C0047-12
C0501-15
HEADER 0296 (K109)
INTERFACE-CRUISE CONTROL (D245)
YN,MAPI
(CRUISE)
C0296-6
C0296-5
YN,MAPH
(CRUISE)
C1959-5
YN,MAPG
(CRUISE)
C0296-12
C1959-6
YB,MAPG
(CRUISE)
C0296-14
YB,MAPI
(CRUISE)
C0296-13
C0296-7
YB,MAPH
(CRUISE)
C
YB,MAPA
C0223-13 C0047-13
C0501-11
YB,MAPD
(NON CRUISE)
VWR003950-A-03

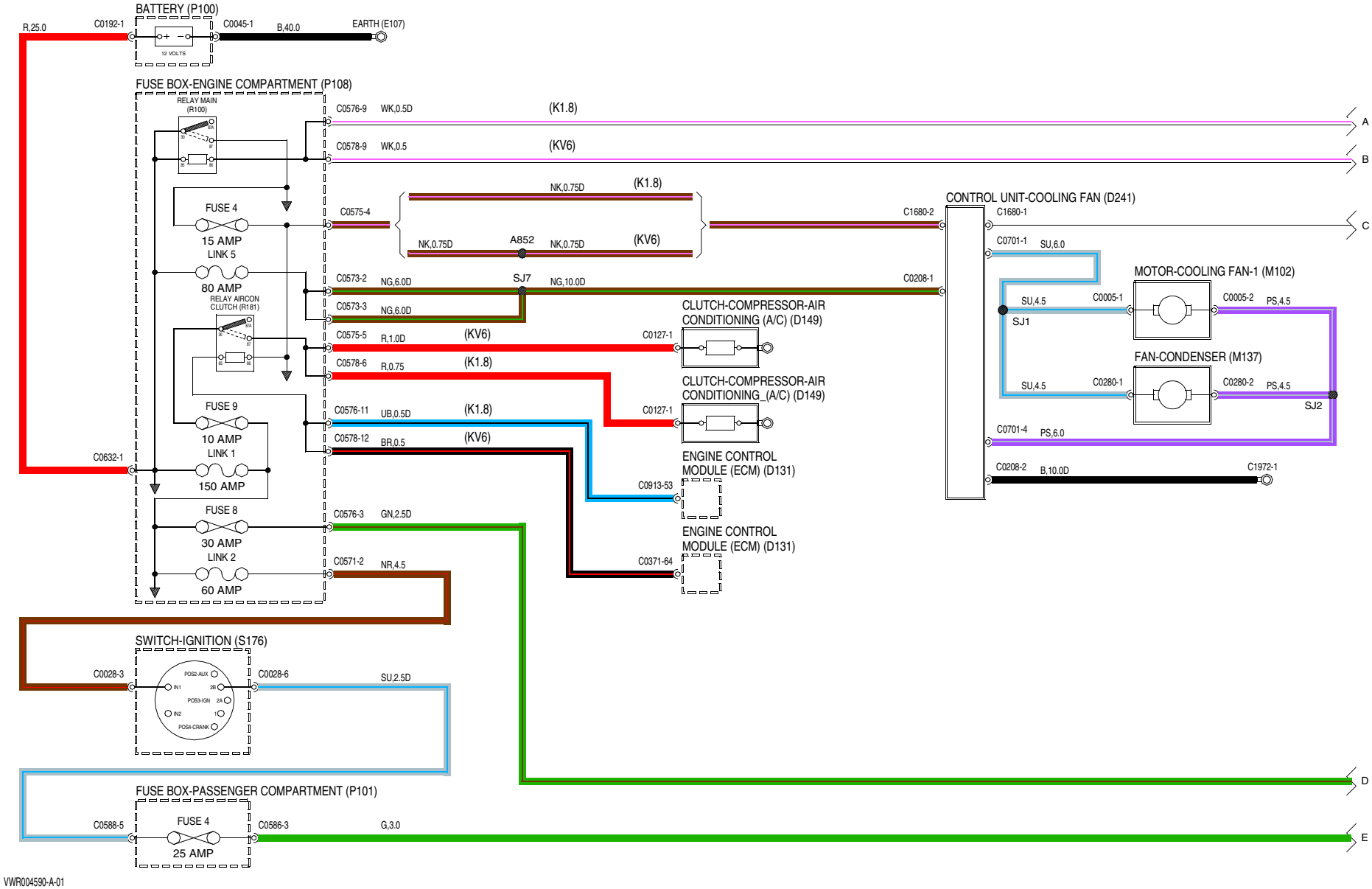
BATTERY (P100)
R,25.0
C0192-1
12 VOLTS
C0045-1
B,40.0
EARTH (E107)
FUSE BOX-ENGINE COMPARTMENT (P108)
RELAY MAIN (R100)
C0576-9 WK,0.5D (K1.8)
C0578-9 WK,0.5 (KV6)
FUSE 4
15 AMP
LINK 5
80 AMP
RELAY AIRCON CLUTCH (R181)
C0575-4
NK,0.75D (K1.8)
NK,0.75D A852 NK,0.75D (KV6)
C1680-2
CONTROL UNIT-COOLING FAN (D241)
C1680-1
C0701-1 SU,6.0
C0573-2 NG,6.0D SJ7 NG,10.0D
C0208-1
C0573-3 NG,6.0D
MOTOR-COOLING FAN-1 (M102)
SU,4.5 C0005-1 C0005-2 PS,4.5
SJ1
CLUTCH-COMPRESSOR-AIR CONDITIONING (A/C) (D149)
C0575-5 R,1.0D (KV6)
C0127-1
C0578-6 R,0.75 (K1.8)
FAN-CONDENSER (M137)
SU,4.5 C0280-1 C0280-2 PS,4.5
SJ2
CLUTCH-COMPRESSOR-AIR CONDITIONING_(A/C) (D149)
FUSE 9
10 AMP
LINK 1
C0576-11 UB,0.5D (K1.8)
C0127-1
C0578-12 BR,0.5 (KV6)
C0701-4 PS,6.0
C0632-1
150 AMP
ENGINE CONTROL MODULE (ECM) (D131)
C0913-53
C0208-2 B,10.0D C1972-1
FUSE 8
30 AMP
LINK 2
60 AMP
C0576-3 GN,2.5D
ENGINE CONTROL MODULE (ECM) (D131)
C0371-64
C0571-2 NR,4.5
SWITCH-IGNITION (S176)
C0028-3
C0028-6 SU,2.5D
FUSE BOX-PASSENGER COMPARTMENT (P101)
C0588-5
FUSE 4
25 AMP
C0586-3 G,3.0
A
B
C
D
E
VWR004590-A-01

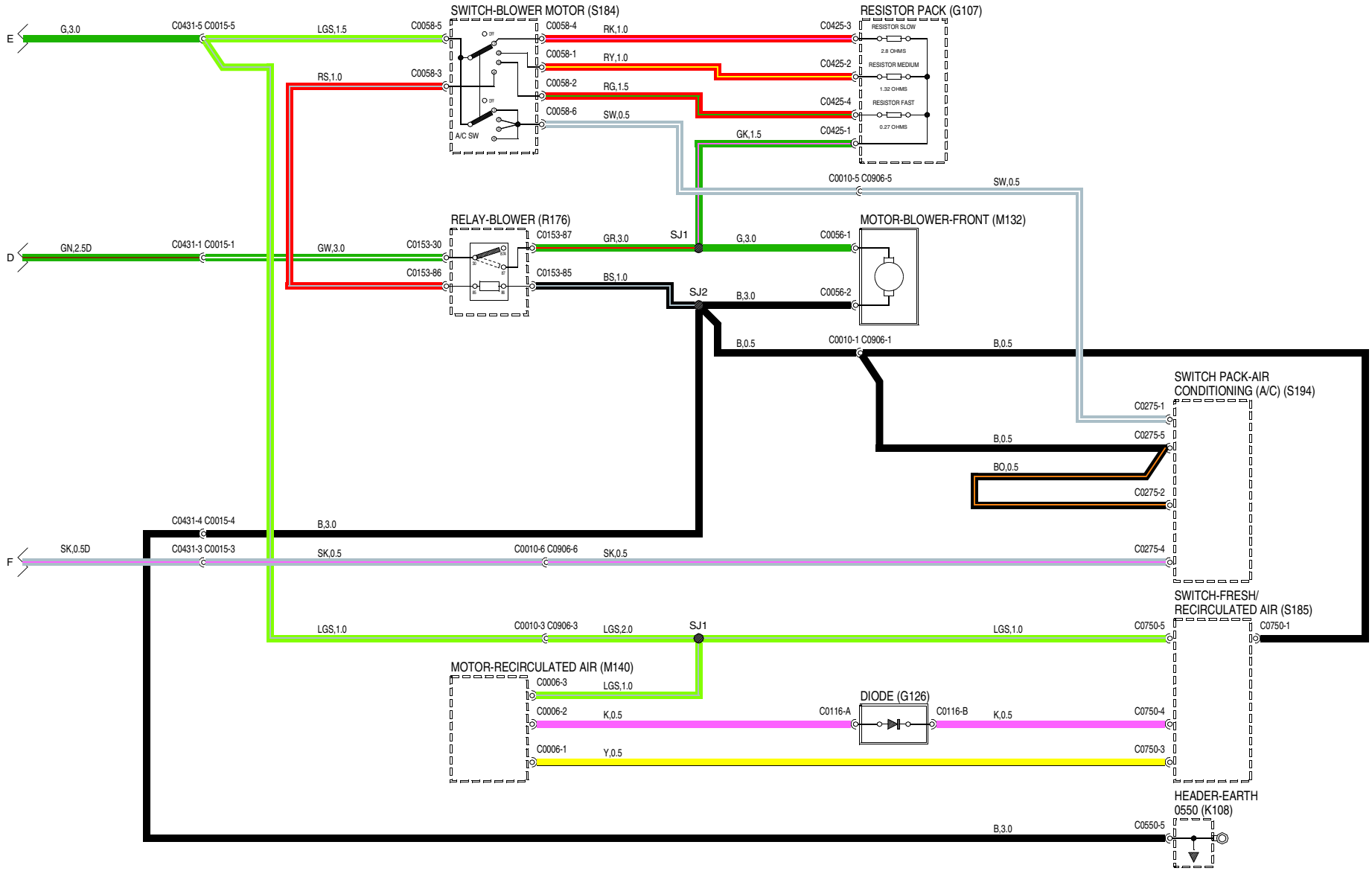

VWR004590-A-02

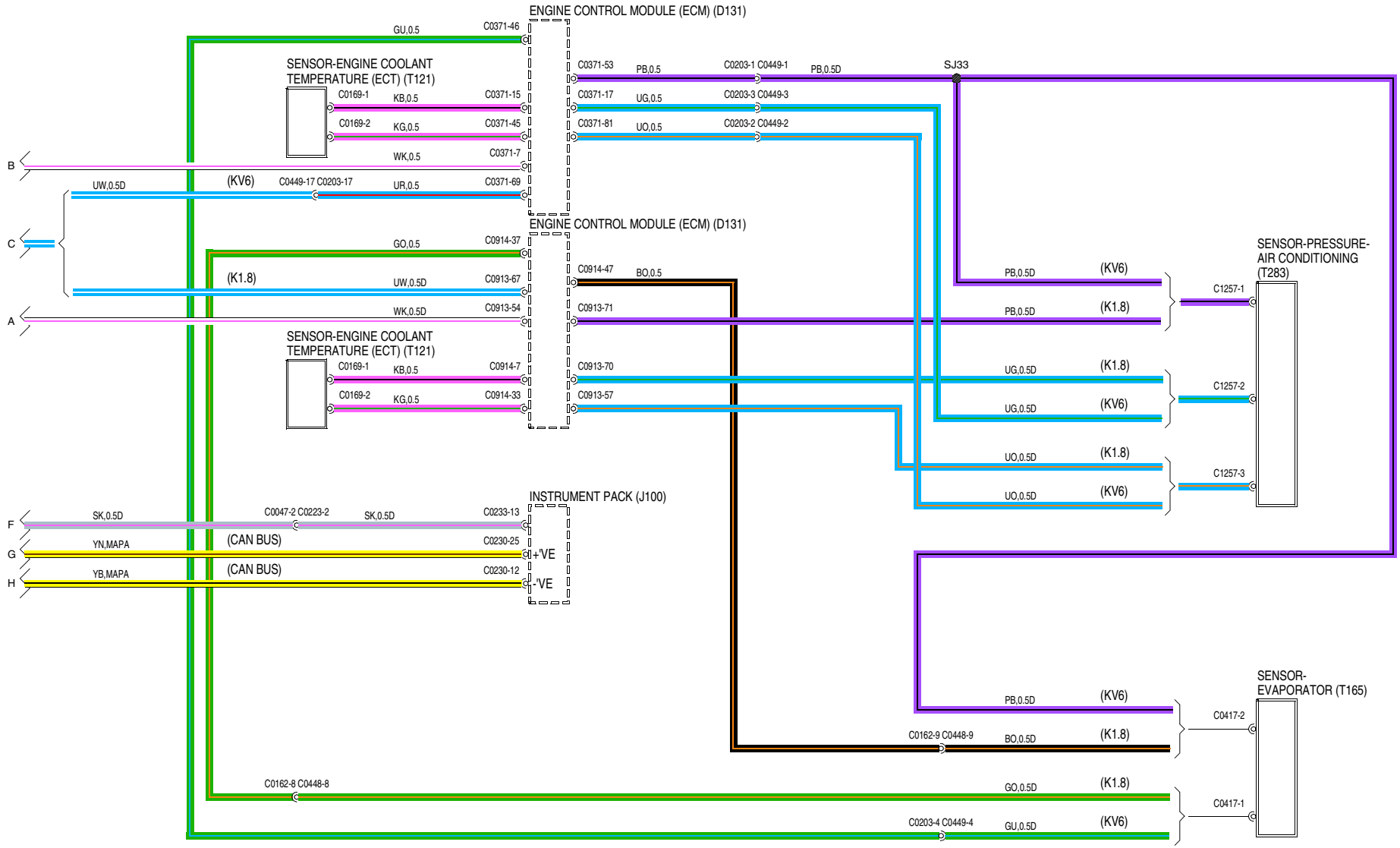
ENGINE CONTROL MODULE (ECM) (D131)
GU,0.5
C0371-46
SENSOR-ENGINE COOLANT TEMPERATURE (ECT) (T121)
C0169-1
KB,0.5
C0371-15
C0169-2
KG,0.5
C0371-45
WK,0.5
C0371-7
B
UW,0.5D
(KV6)
C0449-17 C0203-17
UR,0.5
C0371-69
C0371-53
PB,0.5
C0203-1 C0449-1
PB,0.5D
SJ33
C0371-17
UG,0.5
C0203-3 C0449-3
C0371-81
UO,0.5
C0203-2 C0449-2
ENGINE CONTROL MODULE (ECM) (D131)
C
GO,0.5
C0914-37
(K1.8)
UW,0.5D
C0913-67
A
WK,0.5D
C0913-54
SENSOR-ENGINE COOLANT TEMPERATURE (ECT) (T121)
C0169-1
KB,0.5
C0914-7
C0169-2
KG,0.5
C0914-33
C0914-47
BO,0.5
C0913-71
C0913-70
C0913-57
PB,0.5D
(KV6)
PB,0.5D
(K1.8)
C1257-1
SENSOR-PRESSURE-AIR CONDITIONING (T283)
UG,0.5D
(K1.8)
UG,0.5D
(KV6)
C1257-2
UO,0.5D
(K1.8)
UO,0.5D
(KV6)
C1257-3
INSTRUMENT PACK (J100)
F
SK,0.5D
C0047-2 C0223-2
SK,0.5D
C0233-13
G
YN,MAPA
(CAN BUS)
C0230-25
+'VE
H
YB,MAPA
(CAN BUS)
C0230-12
-'VE
PB,0.5D
(KV6)
C0162-9 C0448-9
BO,0.5D
(K1.8)
C0417-2
SENSOR-EVAPORATOR (T165)
C0162-8 C0448-8
GO,0.5D
(K1.8)
C0203-4 C0449-4
GU,0.5D
(KV6)
C0417-1
VWR004590-A-03

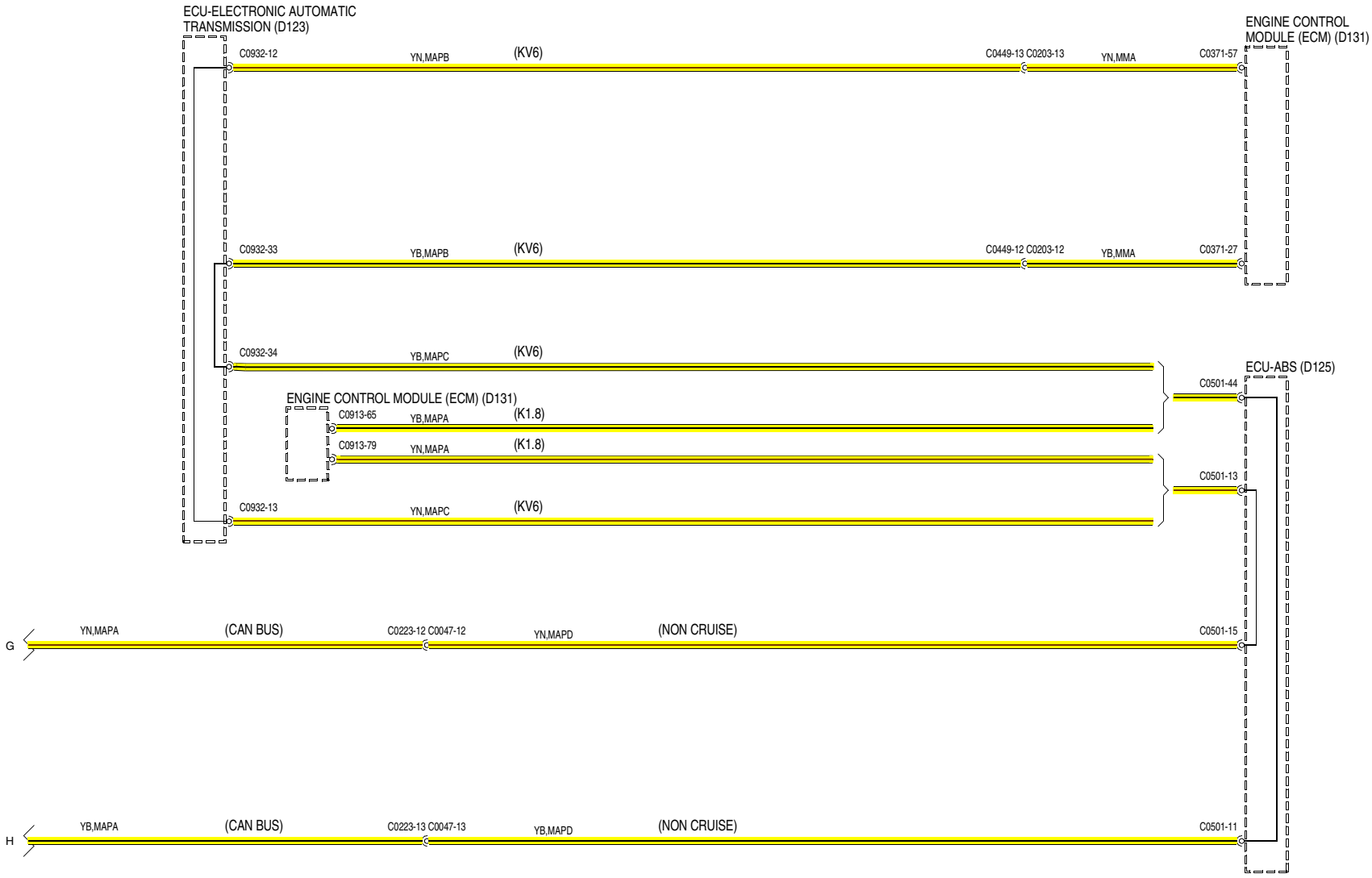
ECU-ELECTRONIC AUTOMATIC TRANSMISSION (D123)
ENGINE CONTROL MODULE (ECM) (D131)
C0932-12
YN,MAPB
(KV6)
C0449-13 C0203-13
YN,MMA
C0371-57
C0932-33
YB,MAPB
(KV6)
C0449-12 C0203-12
YB,MMA
C0371-27
C0932-34
YB,MAPC
(KV6)
ECU-ABS (D125)
C0501-44
ENGINE CONTROL MODULE (ECM) (D131)
C0913-65
YB,MAPA
(K1.8)
C0913-79
YN,MAPA
(K1.8)
C0501-13
C0932-13
YN,MAPC
(KV6)
G
YN,MAPA
(CAN BUS)
C0223-12 C0047-12
YN,MAPD
(NON CRUISE)
C0501-15
H
YB,MAPA
(CAN BUS)
C0223-13 C0047-13
YB,MAPD
(NON CRUISE)
C0501-11
VWR004590-A-04

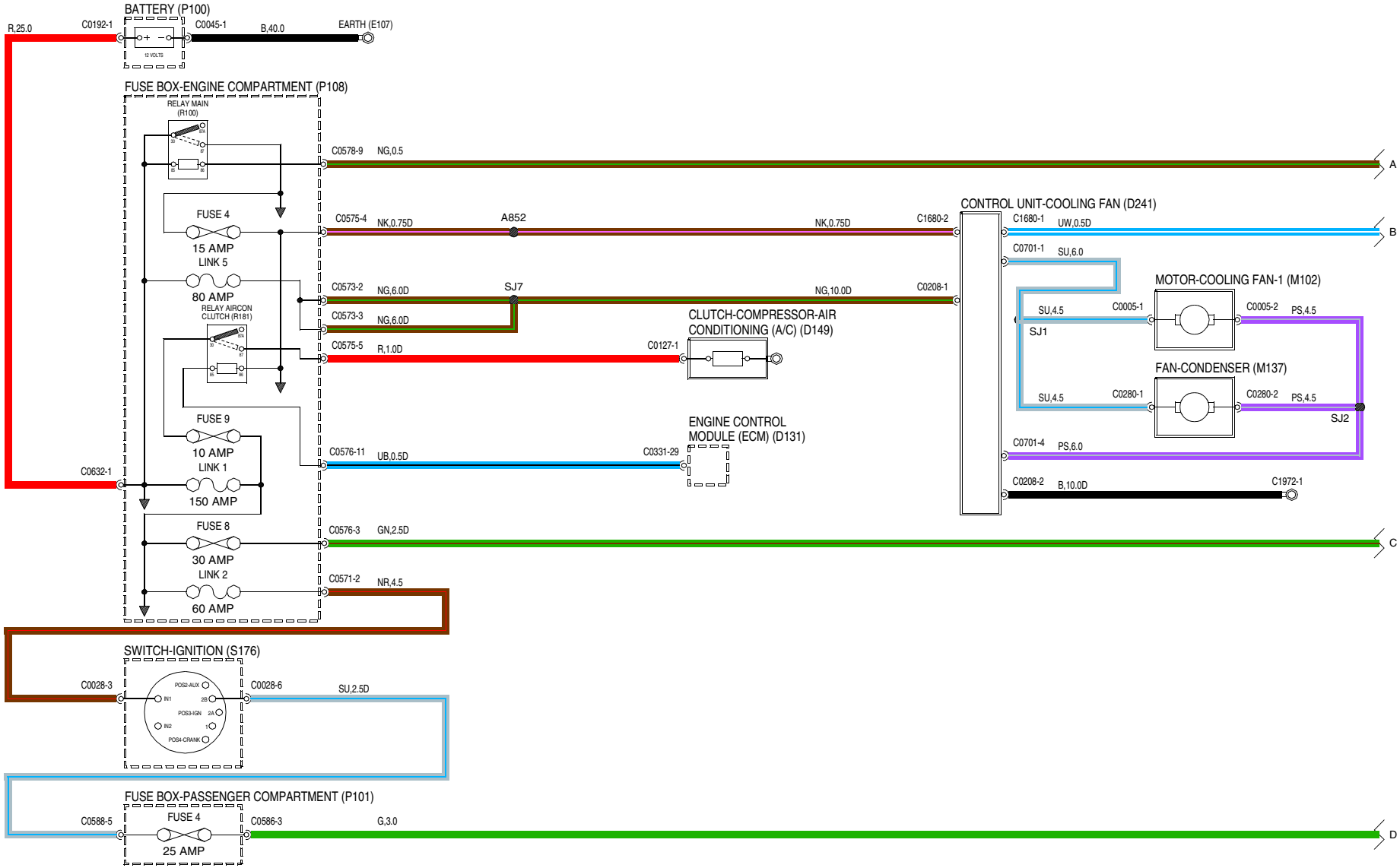
BATTERY (P100)
R,25.0
C0192-1
C0045-1
B,40.0
EARTH (E107)
12 VOLTS
FUSE BOX-ENGINE COMPARTMENT (P108)
RELAY MAIN (R100)
C0578-9
NG,0.5
A
FUSE 4
15 AMP
LINK 5
80 AMP
RELAY AIRCON CLUTCH (R181)
C0575-4
NK,0.75D
A852
NK,0.75D
C1680-2
CONTROL UNIT-COOLING FAN (D241)
C1680-1
UW,0.5D
B
C0701-1
SU,6.0
C0573-2
NG,6.0D
SJ7
NG,10.0D
C0208-1
MOTOR-COOLING FAN-1 (M102)
SU,4.5
C0005-1
C0005-2
PS,4.5
SJ1
C0573-3
NG,6.0D
CLUTCH-COMPRESSOR-AIR CONDITIONING (A/C) (D149)
C0575-5
R,1.0D
C0127-1
FAN-CONDENSER (M137)
SU,4.5
C0280-1
C0280-2
PS,4.5
SJ2
FUSE 9
10 AMP
LINK 1
ENGINE CONTROL MODULE (ECM) (D131)
C0576-11
UB,0.5D
C0331-29
C0701-4
PS,6.0
C0632-1
150 AMP
C0208-2
B,10.0D
C1972-1
FUSE 8
30 AMP
LINK 2
C0576-3
GN,2.5D
C
C0571-2
NR,4.5
60 AMP
SWITCH-IGNITION (S176)
C0028-3
C0028-6
SU,2.5D
POS2-AUX
IN1
2B
POS3-IGN
2A
IN2
1
POS4-CRANK
FUSE BOX-PASSENGER COMPARTMENT (P101)
C0588-5
FUSE 4
25 AMP
C0586-3
G,3.0
D
VWR003960-A-01

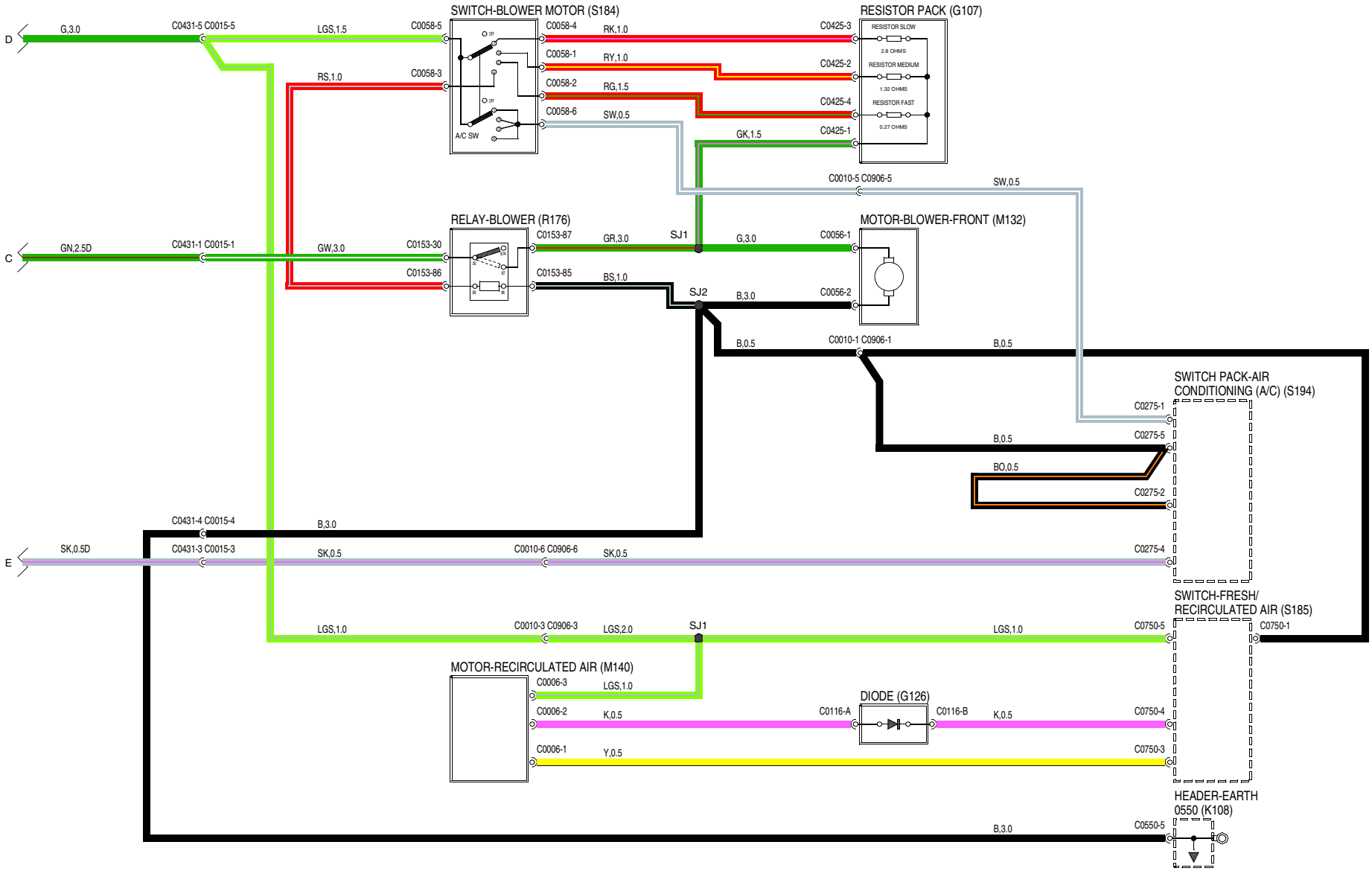
SWITCH-BLOWER MOTOR (S184)
RESISTOR PACK (G107)
RESISTOR SLOW
2.8 OHMS
RESISTOR MEDIUM
1.32 OHMS
RESISTOR FAST
0.27 OHMS
A/C SW
RELAY-BLOWER (R176)
MOTOR-BLOWER-FRONT (M132)
SWITCH PACK-AIR CONDITIONING (A/C) (S194)
SWITCH-FRESH/ RECIRCULATED AIR (S185)
MOTOR-RECIRCULATED AIR (M140)
DIODE (G126)
HEADER-EARTH 0550 (K108)
D
C
E
G,3.0
C0431-5 C0015-5
LGS,1.5
C0058-5
C0058-4
RK,1.0
C0425-3
C0058-1
RY,1.0
C0425-2
RS,1.0
C0058-3
C0058-2
RG,1.5
C0425-4
C0058-6
SW,0.5
GK,1.5
C0425-1
C0010-5 C0906-5
SW,0.5
GN,2.5D
C0431-1 C0015-1
GW,3.0
C0153-30
C0153-86
C0153-87
GR,3.0
SJ1
G,3.0
C0056-1
C0153-85
BS,1.0
SJ2
B,3.0
C0056-2
B,0.5
C0010-1 C0906-1
B,0.5
C0275-1
C0275-5
B,0.5
BO,0.5
C0275-2
C0431-4 C0015-4
B,3.0
SK,0.5D
C0431-3 C0015-3
SK,0.5
C0010-6 C0906-6
SK,0.5
C0275-4
LGS,1.0
C0010-3 C0906-3
LGS,2.0
SJ1
LGS,1.0
C0750-5
C0750-1
C0006-3
LGS,1.0
C0006-2
K,0.5
C0116-A
C0116-B
K,0.5
C0750-4
C0006-1
Y,0.5
C0750-3
B,3.0
C0550-5
VWR003960-A-02

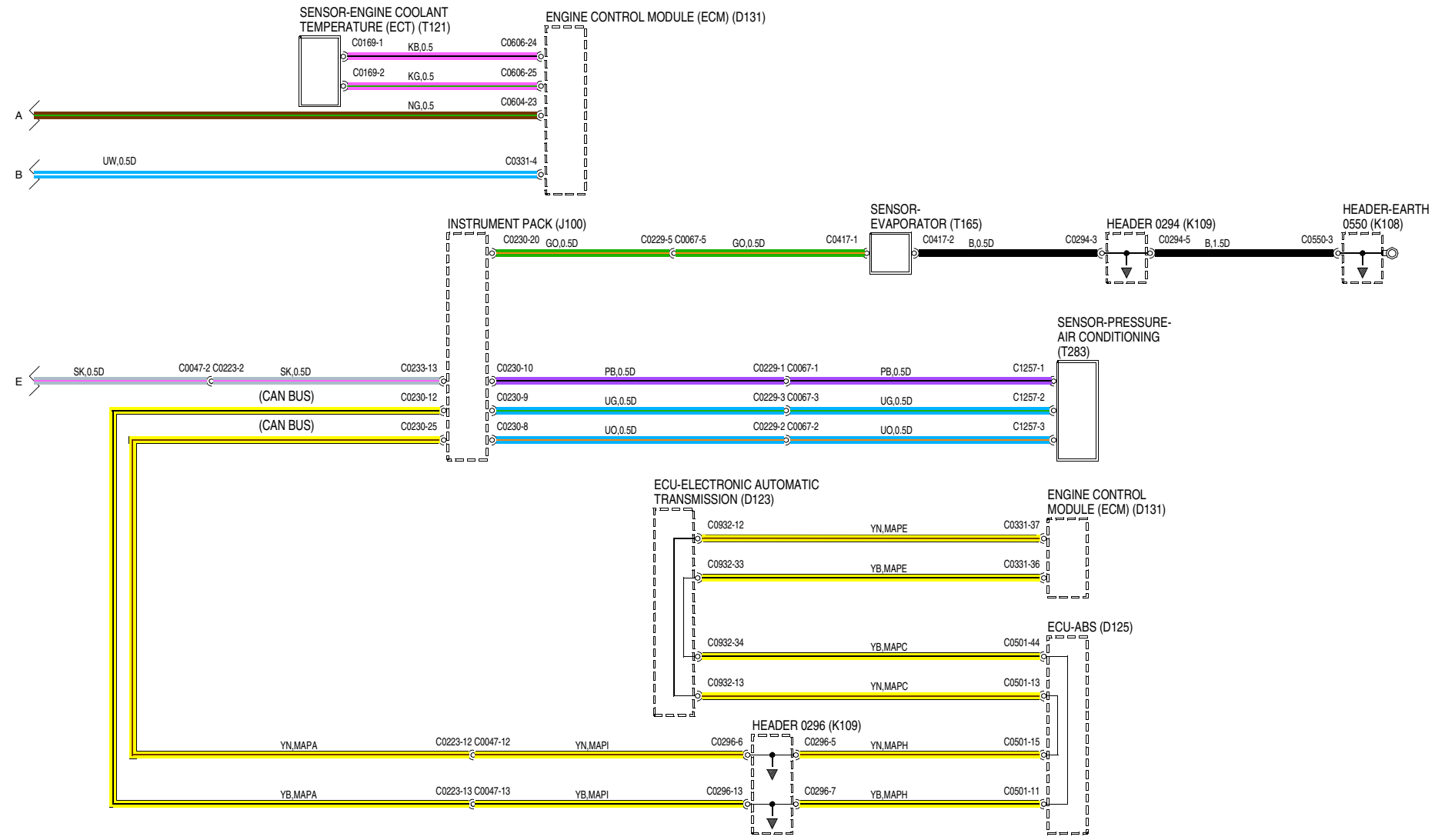

VWR003960-A-03

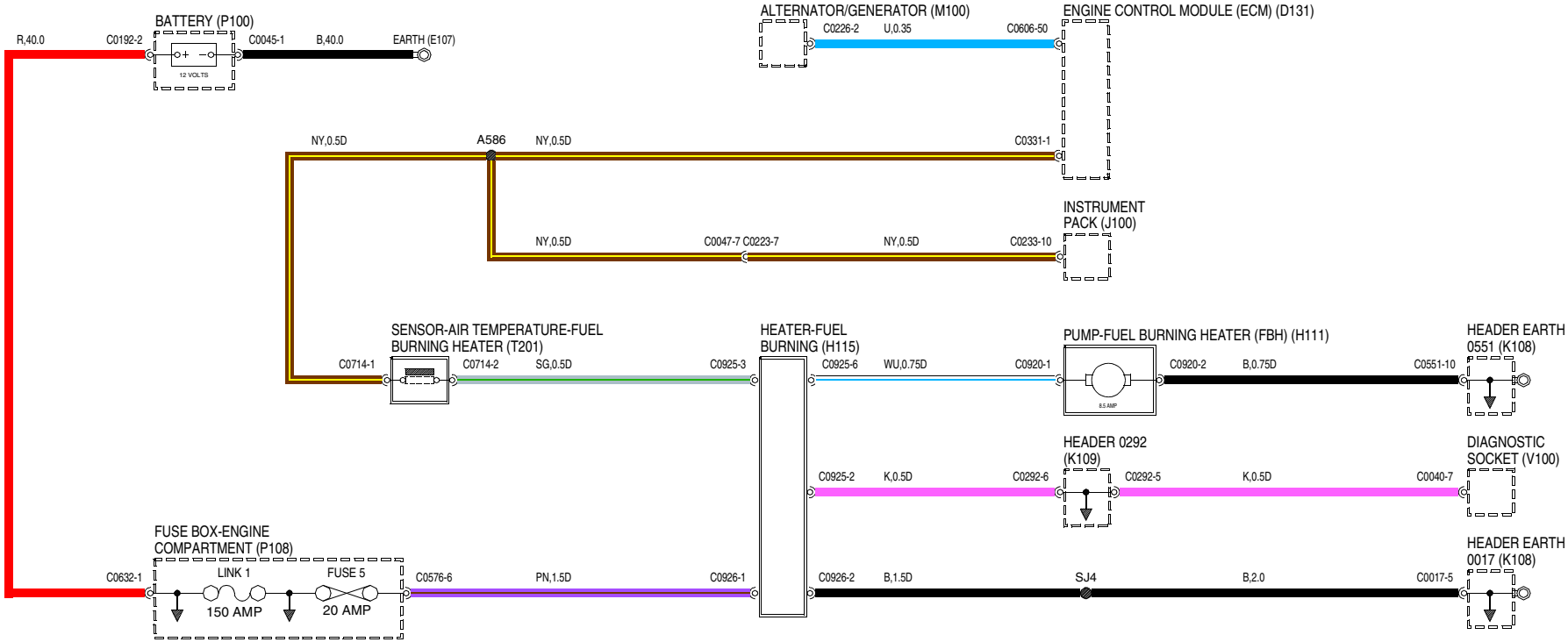

VWR004110-A-01

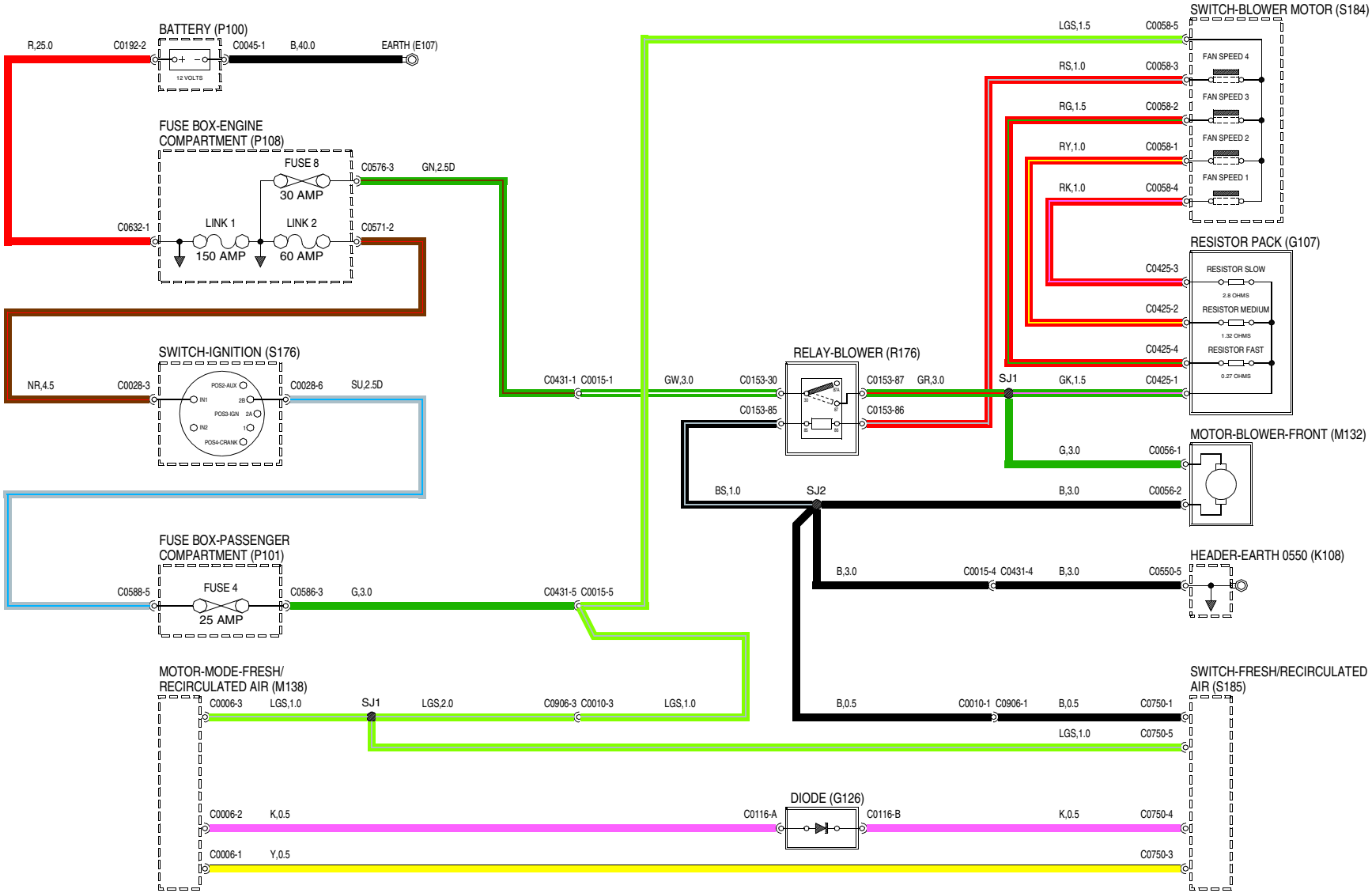
BATTERY (P100)
R,25.0
C0192-2
12 VOLTS
C0045-1
B,40.0
EARTH (E107)
FUSE BOX-ENGINE COMPARTMENT (P108)
FUSE 8
30 AMP
C0576-3
GN,2.5D
C0632-1
LINK 1
150 AMP
LINK 2
60 AMP
C0571-2
SWITCH-IGNITION (S176)
NR,4.5
C0028-3
POS2-AUX
IN1
2B
POS3-IGN
2A
IN2
1
POS4-CRANK
C0028-6
SU,2.5D
FUSE BOX-PASSENGER COMPARTMENT (P101)
C0588-5
FUSE 4
25 AMP
C0586-3
G,3.0
C0431-5 C0015-5
C0431-1 C0015-1
GW,3.0
C0153-30
C0153-85
RELAY-BLOWER (R176)
C0153-87
GR,3.0
C0153-86
SJ1
SJ2
BS,1.0
SWITCH-BLOWER MOTOR (S184)
LGS,1.5
C0058-5
FAN SPEED 4
RS,1.0
C0058-3
FAN SPEED 3
RG,1.5
C0058-2
FAN SPEED 2
RY,1.0
C0058-1
FAN SPEED 1
RK,1.0
C0058-4
RESISTOR PACK (G107)
C0425-3
RESISTOR SLOW
2.8 OHMS
C0425-2
RESISTOR MEDIUM
1.32 OHMS
C0425-4
RESISTOR FAST
0.27 OHMS
GK,1.5
C0425-1
MOTOR-BLOWER-FRONT (M132)
G,3.0
C0056-1
B,3.0
C0056-2
HEADER-EARTH 0550 (K108)
B,3.0
C0015-4 C0431-4
B,3.0
C0550-5
MOTOR-MODE-FRESH/ RECIRCULATED AIR (M138)
C0006-3
LGS,1.0
SJ1
LGS,2.0
C0906-3 C0010-3
LGS,1.0
SWITCH-FRESH/RECIRCULATED AIR (S185)
B,0.5
C0010-1 C0906-1
B,0.5
C0750-1
LGS,1.0
C0750-5
DIODE (G126)
C0006-2
K,0.5
C0116-A
C0116-B
K,0.5
C0750-4
C0006-1
Y,0.5
C0750-3
VWR004160-A-01

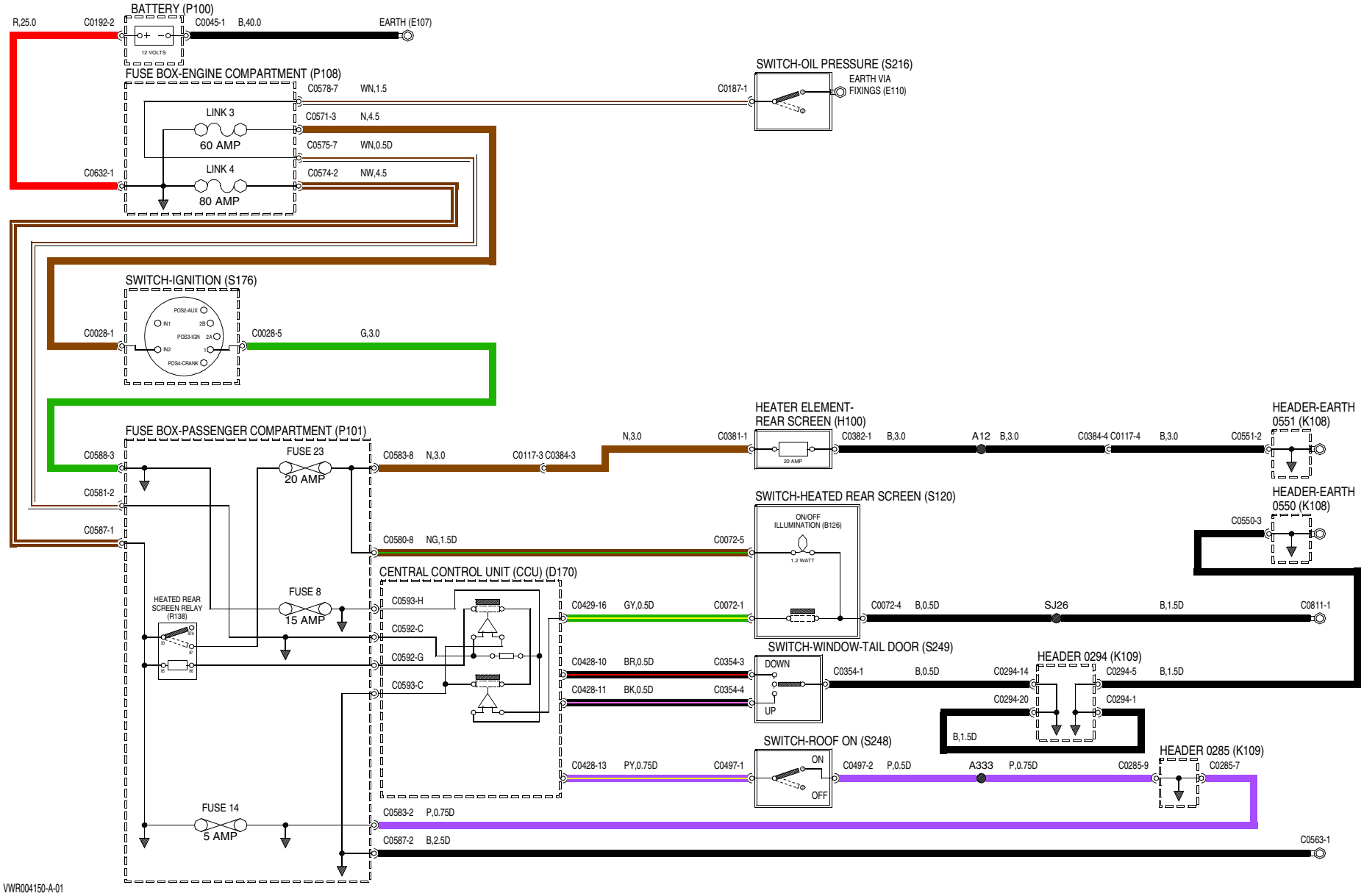
BATTERY (P100)
R,25.0
C0192-2
C0045-1
B,40.0
EARTH (E107)
12 VOLTS
FUSE BOX-ENGINE COMPARTMENT (P108)
C0578-7
WN,1.5
C0187-1
SWITCH-OIL PRESSURE (S216)
EARTH VIA FIXINGS (E110)
LINK 3
60 AMP
C0571-3
N,4.5
C0575-7
WN,0.5D
C0632-1
LINK 4
80 AMP
C0574-2
NW,4.5
SWITCH-IGNITION (S176)
POS2-AUX
IN1
2B
POS3-IGN
2A
IN2
1
POS4-CRANK
C0028-1
C0028-5
G,3.0
FUSE BOX-PASSENGER COMPARTMENT (P101)
C0588-3
FUSE 23
20 AMP
C0583-8
N,3.0
C0117-3 C0384-3
N,3.0
C0381-1
HEATER ELEMENT-REAR SCREEN (H100)
20 AMP
C0382-1
B,3.0
A12
B,3.0
C0384-4 C0117-4
B,3.0
C0551-2
HEADER-EARTH 0551 (K108)
C0581-2
C0587-1
SWITCH-HEATED REAR SCREEN (S120)
ON/OFF ILLUMINATION (B126)
1.2 WATT
HEADER-EARTH 0550 (K108)
C0550-3
C0580-8
NG,1.5D
C0072-5
CENTRAL CONTROL UNIT (CCU) (D170)
HEATED REAR SCREEN RELAY (R138)
FUSE 8
15 AMP
C0593-H
C0592-C
C0592-G
C0593-C
C0429-16
GY,0.5D
C0072-1
C0072-4
B,0.5D
SJ26
B,1.5D
C0811-1
SWITCH-WINDOW-TAIL DOOR (S249)
DOWN
UP
C0428-10
BR,0.5D
C0354-3
C0428-11
BK,0.5D
C0354-4
C0354-1
B,0.5D
C0294-14
HEADER 0294 (K109)
C0294-5
B,1.5D
C0294-20
C0294-1
B,1.5D
SWITCH-ROOF ON (S248)
ON
OFF
C0428-13
PY,0.75D
C0497-1
C0497-2
P,0.5D
A333
P,0.75D
C0285-9
HEADER 0285 (K109)
C0285-7
FUSE 14
5 AMP
C0583-2
P,0.75D
C0587-2
B,2.5D
C0563-1
VWR004150-A-01

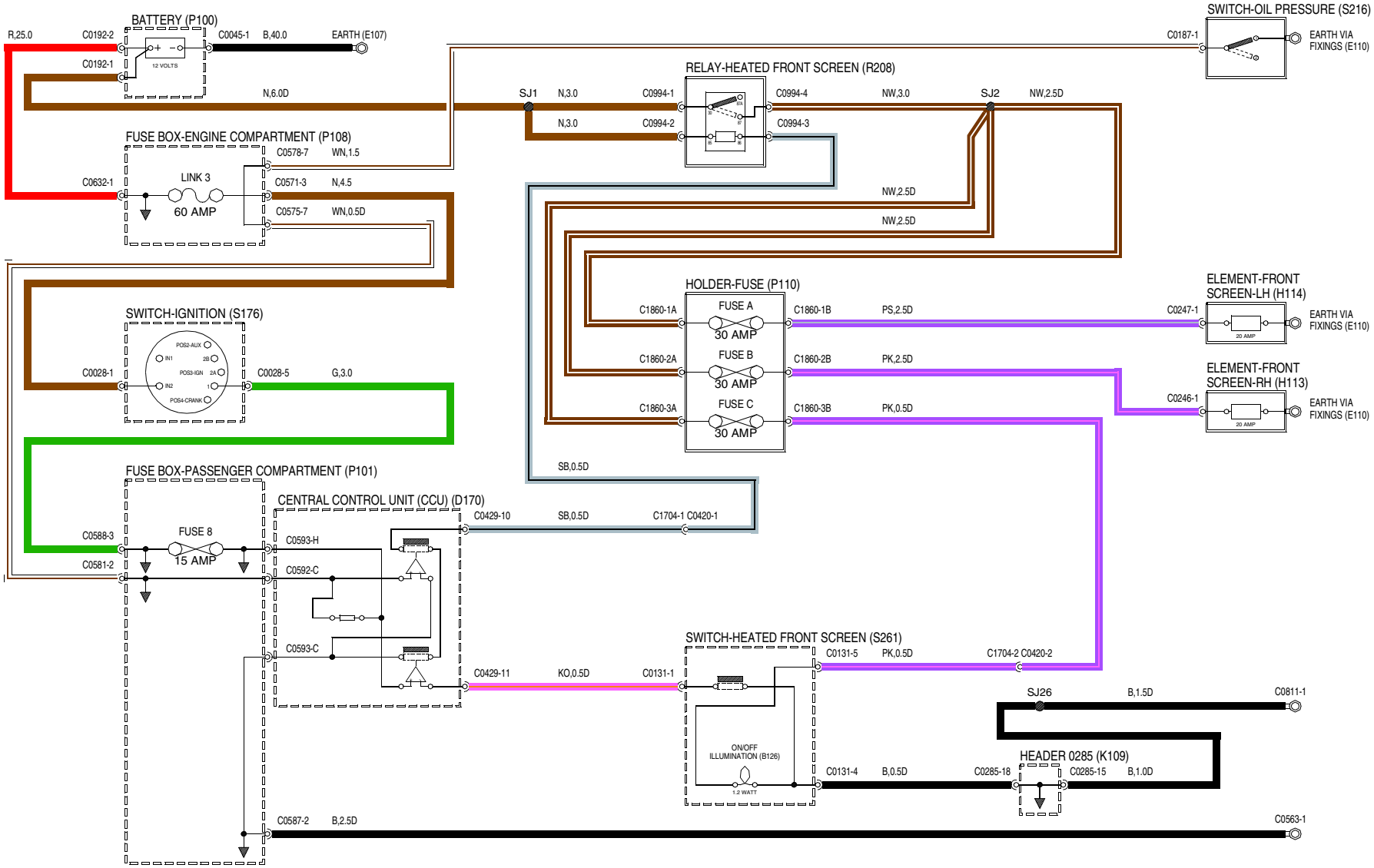
BATTERY (P100)
R,25.0
C0192-2
C0192-1
12 VOLTS
C0045-1
B,40.0
EARTH (E107)
N,6.0D
SWITCH-OIL PRESSURE (S216)
C0187-1
EARTH VIA FIXINGS (E110)
RELAY-HEATED FRONT SCREEN (R208)
SJ1
N,3.0
C0994-1
C0994-2
C0994-4
C0994-3
NW,3.0
SJ2
NW,2.5D
FUSE BOX-ENGINE COMPARTMENT (P108)
C0578-7
WN,1.5
C0632-1
LINK 3
60 AMP
C0571-3
N,4.5
C0575-7
WN,0.5D
NW,2.5D
NW,2.5D
HOLDER-FUSE (P110)
C1860-1A
FUSE A
30 AMP
C1860-1B
PS,2.5D
C1860-2A
FUSE B
30 AMP
C1860-2B
PK,2.5D
C1860-3A
FUSE C
30 AMP
C1860-3B
PK,0.5D
ELEMENT-FRONT SCREEN-LH (H114)
C0247-1
20 AMP
EARTH VIA FIXINGS (E110)
ELEMENT-FRONT SCREEN-RH (H113)
C0246-1
20 AMP
EARTH VIA FIXINGS (E110)
SWITCH-IGNITION (S176)
POS2-AUX
IN1
2B
POS3-IGN
2A
IN2
1
POS4-CRANK
C0028-1
C0028-5
G,3.0
SB,0.5D
FUSE BOX-PASSENGER COMPARTMENT (P101)
CENTRAL CONTROL UNIT (CCU) (D170)
C0429-10
SB,0.5D
C1704-1 C0420-1
C0588-3
FUSE 8
15 AMP
C0581-2
C0593-H
C0592-C
C0593-C
C0429-11
KO,0.5D
C0131-1
SWITCH-HEATED FRONT SCREEN (S261)
C0131-5
PK,0.5D
C1704-2 C0420-2
ON/OFF ILLUMINATION (B126)
1.2 WATT
SJ26
B,1.5D
C0811-1
HEADER 0285 (K109)
C0131-4
B,0.5D
C0285-18
C0285-15
B,1.0D
C0587-2
B,2.5D
C0563-1
VWR004570-A-01

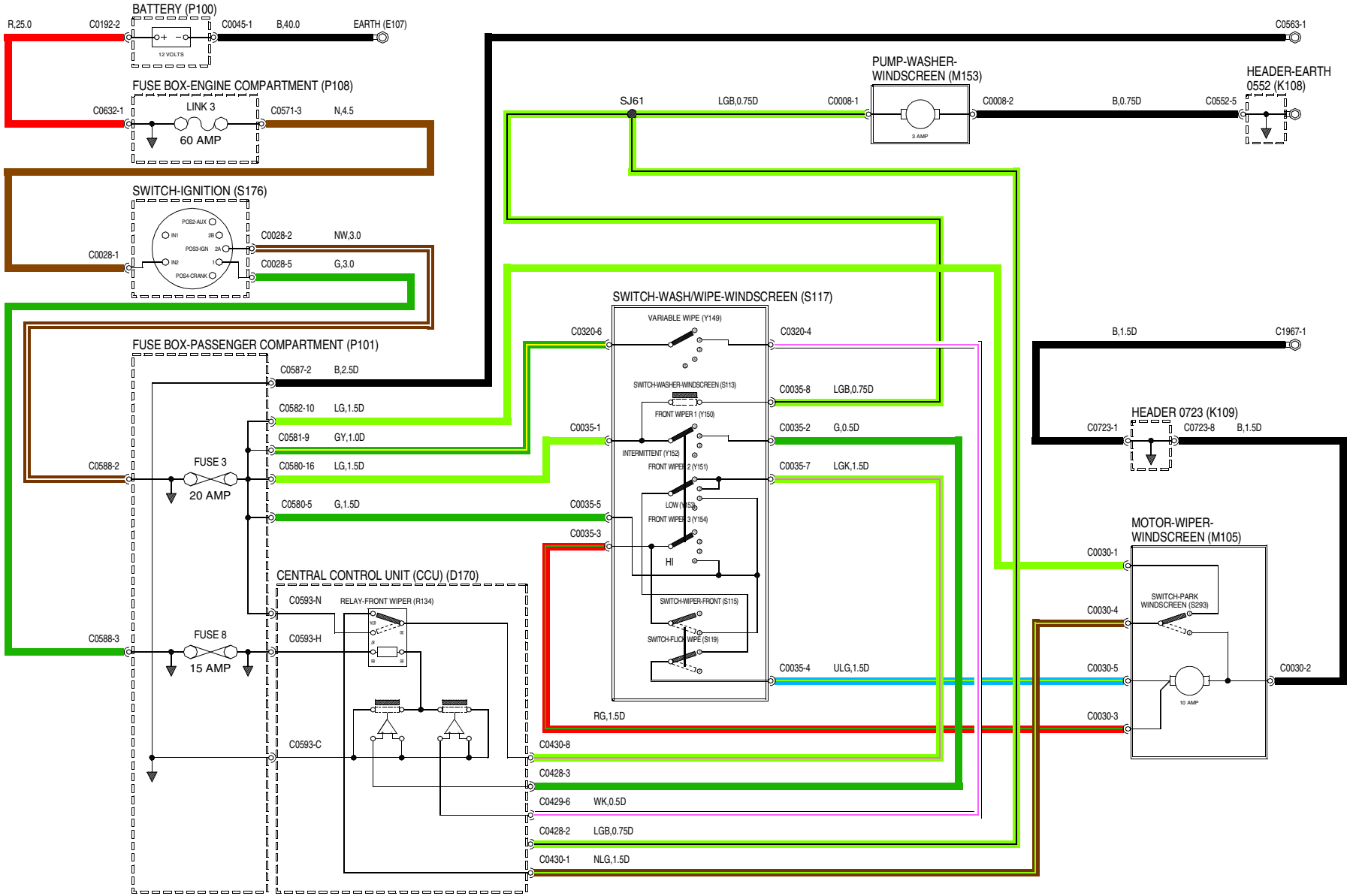

VWR004390-A-01

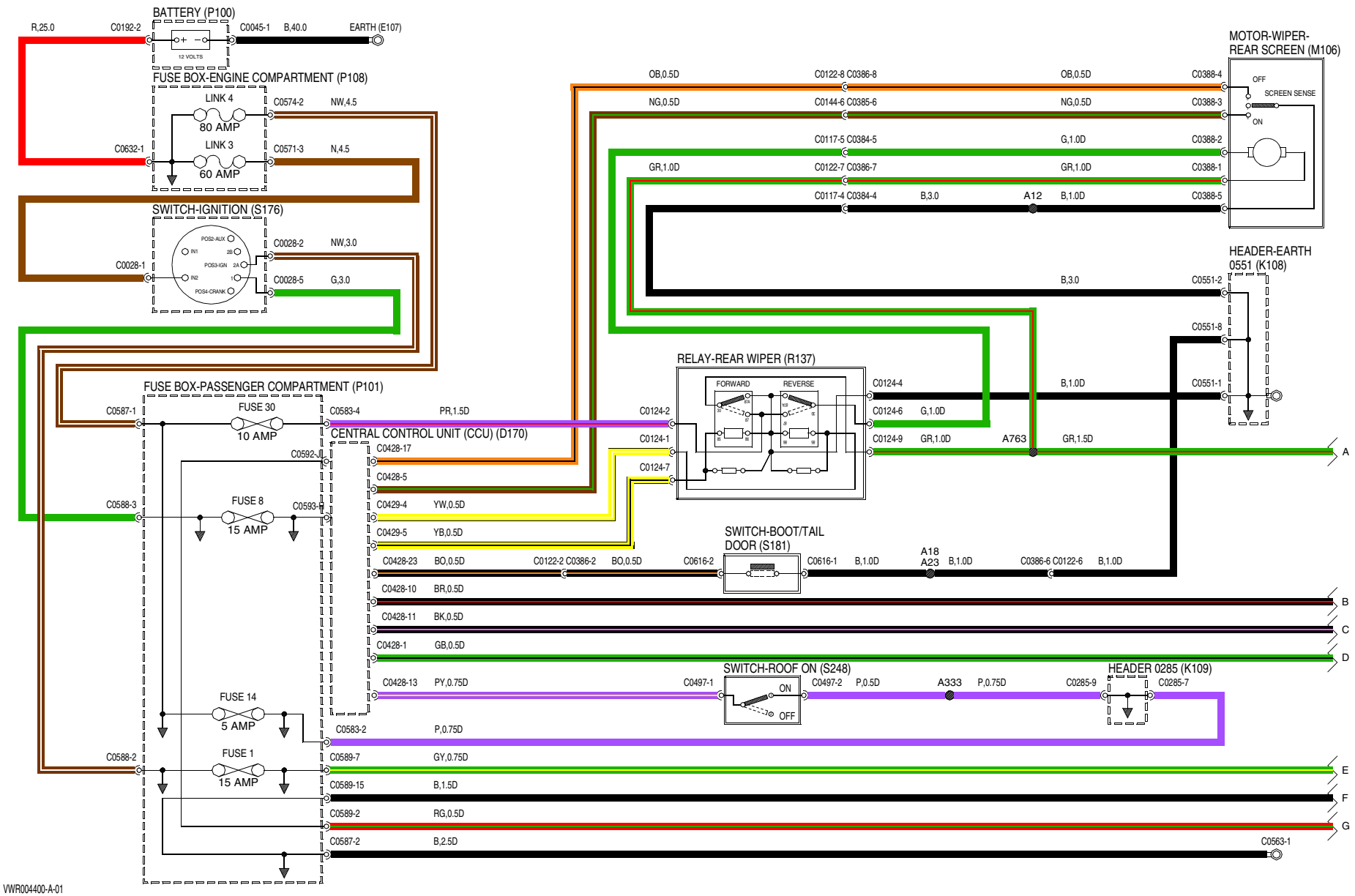
BATTERY (P100)
R,25.0
C0192-2
C0045-1
B,40.0
EARTH (E107)
12 VOLTS
FUSE BOX-ENGINE COMPARTMENT (P108)
LINK 4
80 AMP
LINK 3
60 AMP
C0574-2
NW,4.5
C0632-1
C0571-3
N,4.5
SWITCH-IGNITION (S176)
POS2-AUX
IN1
2B
POS3-IGN
2A
IN2
1
POS4-CRANK
C0028-2
NW,3.0
C0028-1
C0028-5
G,3.0
MOTOR-WIPER-
REAR SCREEN (M106)
OFF
SCREEN SENSE
ON
OB,0.5D
C0122-8 C0386-8
OB,0.5D
C0388-4
NG,0.5D
C0144-6 C0385-6
NG,0.5D
C0388-3
C0117-5 C0384-5
G,1.0D
C0388-2
GR,1.0D
C0122-7 C0386-7
GR,1.0D
C0388-1
C0117-4 C0384-4
B,3.0
A12
B,1.0D
C0388-5
HEADER-EARTH
0551 (K108)
B,3.0
C0551-2
C0551-8
C0551-1
RELAY-REAR WIPER (R137)
FORWARD
REVERSE
C0124-4
B,1.0D
C0124-6
G,1.0D
C0124-9
GR,1.0D
A763
GR,1.5D
C0124-2
C0124-1
C0124-7
FUSE BOX-PASSENGER COMPARTMENT (P101)
C0587-1
FUSE 30
10 AMP
C0583-4
PR,1.5D
CENTRAL CONTROL UNIT (CCU) (D170)
C0592-1
C0428-17
C0428-5
C0588-3
FUSE 8
15 AMP
C0593-1
C0429-4
YW,0.5D
C0429-5
YB,0.5D
SWITCH-BOOT/TAIL
DOOR (S181)
C0428-23
BO,0.5D
C0122-2 C0386-2
BO,0.5D
C0616-2
C0616-1
B,1.0D
A18
A23
B,1.0D
C0386-6 C0122-6
B,1.0D
C0428-10
BR,0.5D
C0428-11
BK,0.5D
C0428-1
GB,0.5D
SWITCH-ROOF ON (S248)
HEADER 0285 (K109)
C0428-13
PY,0.75D
C0497-1
ON
OFF
C0497-2
P,0.5D
A333
P,0.75D
C0285-9
C0285-7
FUSE 14
5 AMP
C0583-2
P,0.75D
C0588-2
FUSE 1
15 AMP
C0589-7
GY,0.75D
C0589-15
B,1.5D
C0589-2
RG,0.5D
C0587-2
B,2.5D
C0563-1
A
B
C
D
E
F
G
VWR004400-A-01

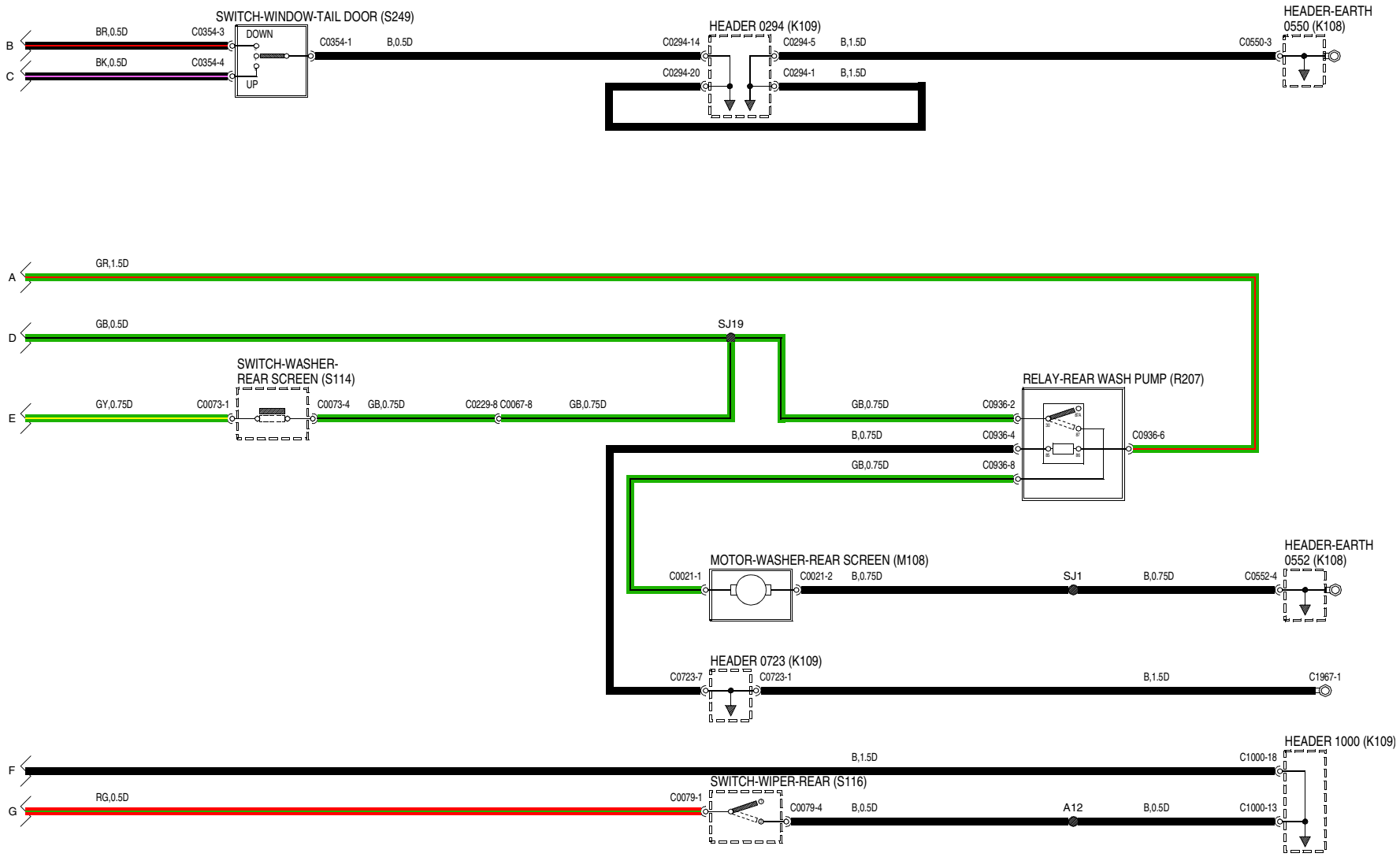
SWITCH-WINDOW-TAIL DOOR (S249)
DOWN
UP
B
C
BR,0.5D
C0354-3
BK,0.5D
C0354-4
C0354-1
B,0.5D
HEADER 0294 (K109)
C0294-14
C0294-5
B,1.5D
C0294-20
C0294-1
B,1.5D
HEADER-EARTH
0550 (K108)
C0550-3
A
GR,1.5D
D
GB,0.5D
SJ19
SWITCH-WASHER-
REAR SCREEN (S114)
E
GY,0.75D
C0073-1
C0073-4
GB,0.75D
C0229-8 C0067-8
GB,0.75D
RELAY-REAR WASH PUMP (R207)
GB,0.75D
C0936-2
B,0.75D
C0936-4
C0936-6
GB,0.75D
C0936-8
MOTOR-WASHER-REAR SCREEN (M108)
C0021-1
C0021-2
B,0.75D
SJ1
B,0.75D
C0552-4
HEADER-EARTH
0552 (K108)
HEADER 0723 (K109)
C0723-7
C0723-1
B,1.5D
C1967-1
F
B,1.5D
C1000-18
HEADER 1000 (K109)
G
RG,0.5D
C0079-1
SWITCH-WIPER-REAR (S116)
C0079-4
B,0.5D
A12
B,0.5D
C1000-13
VWR004400-A-02

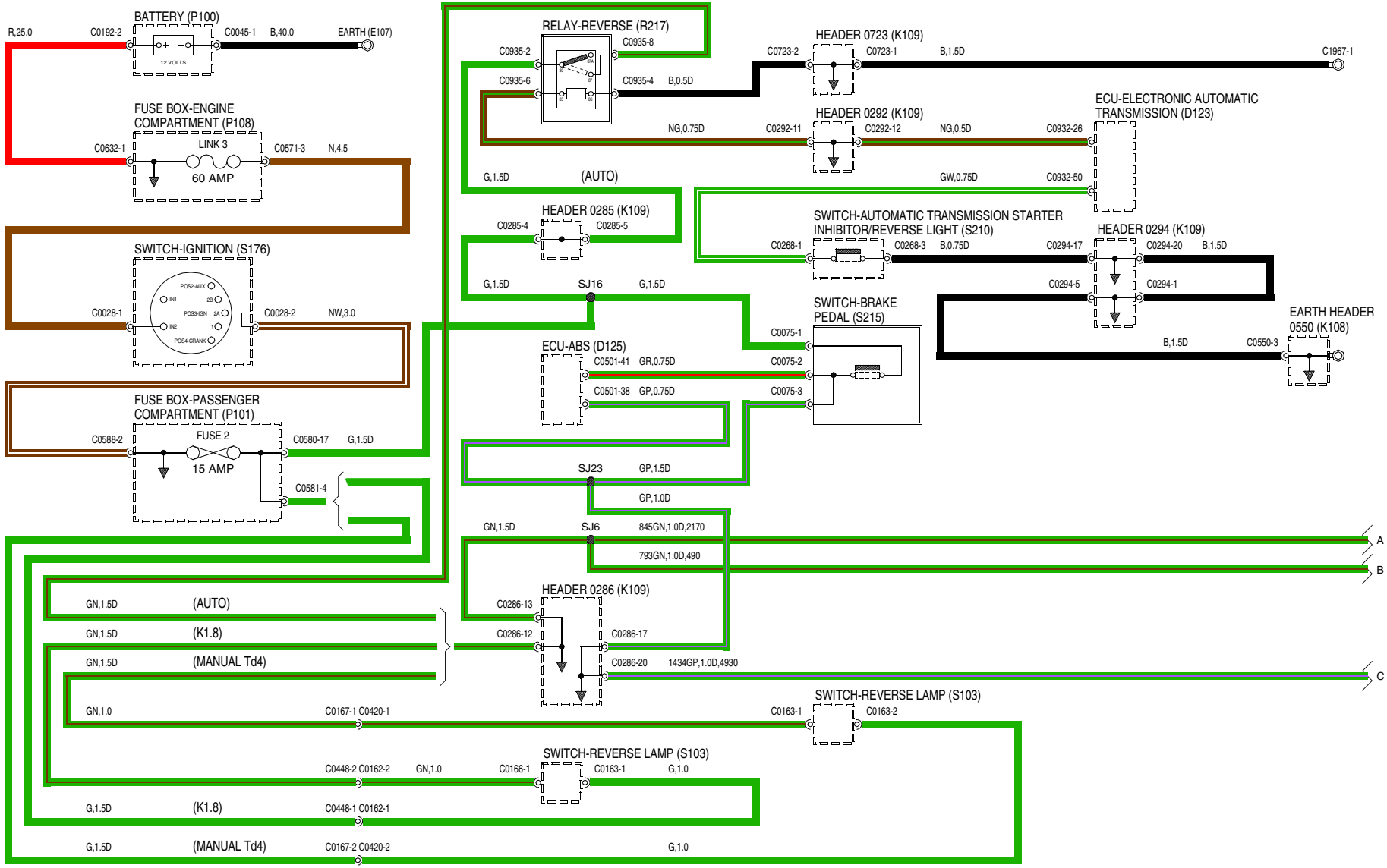

VWR003980-A-01

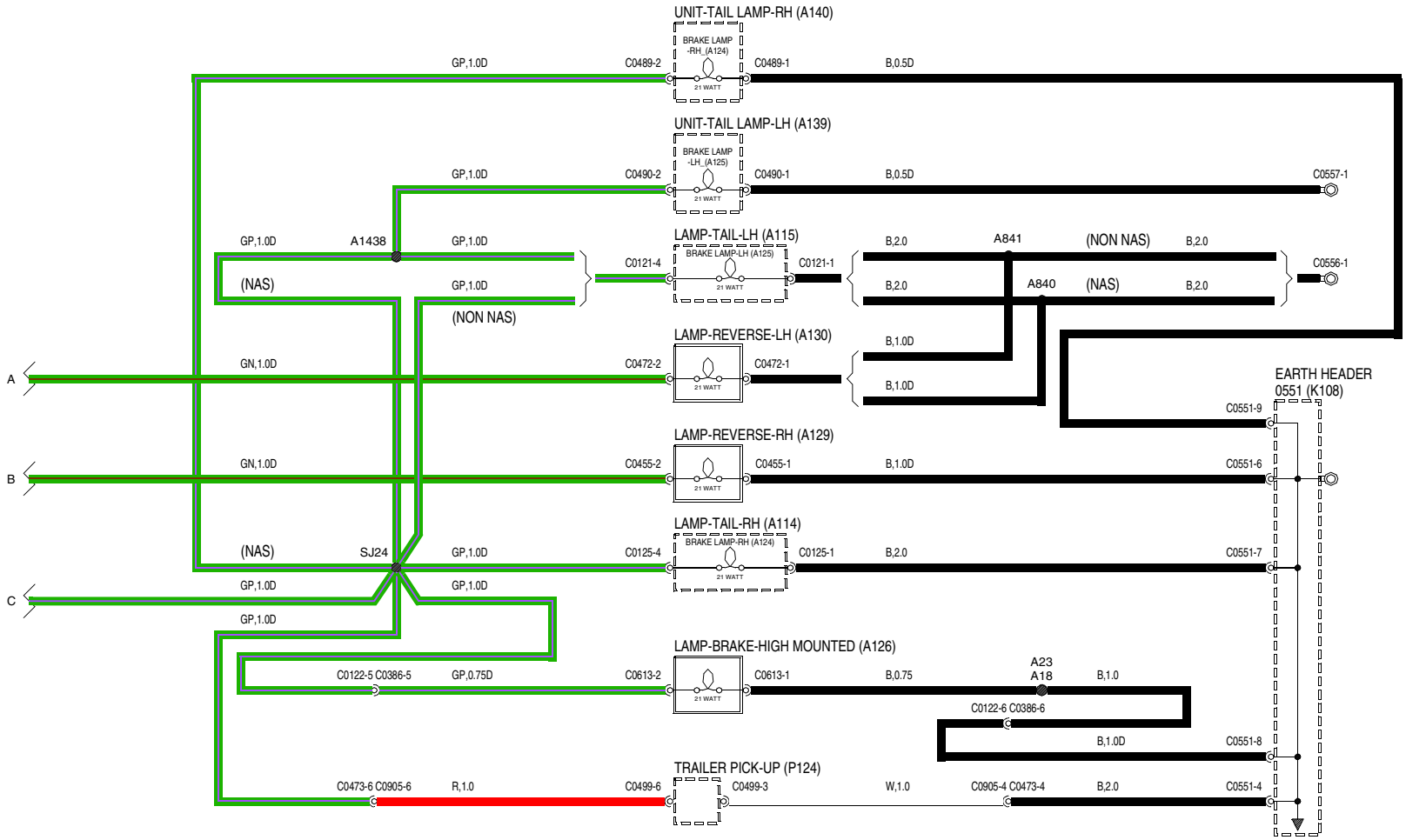

VWR003980-A-02

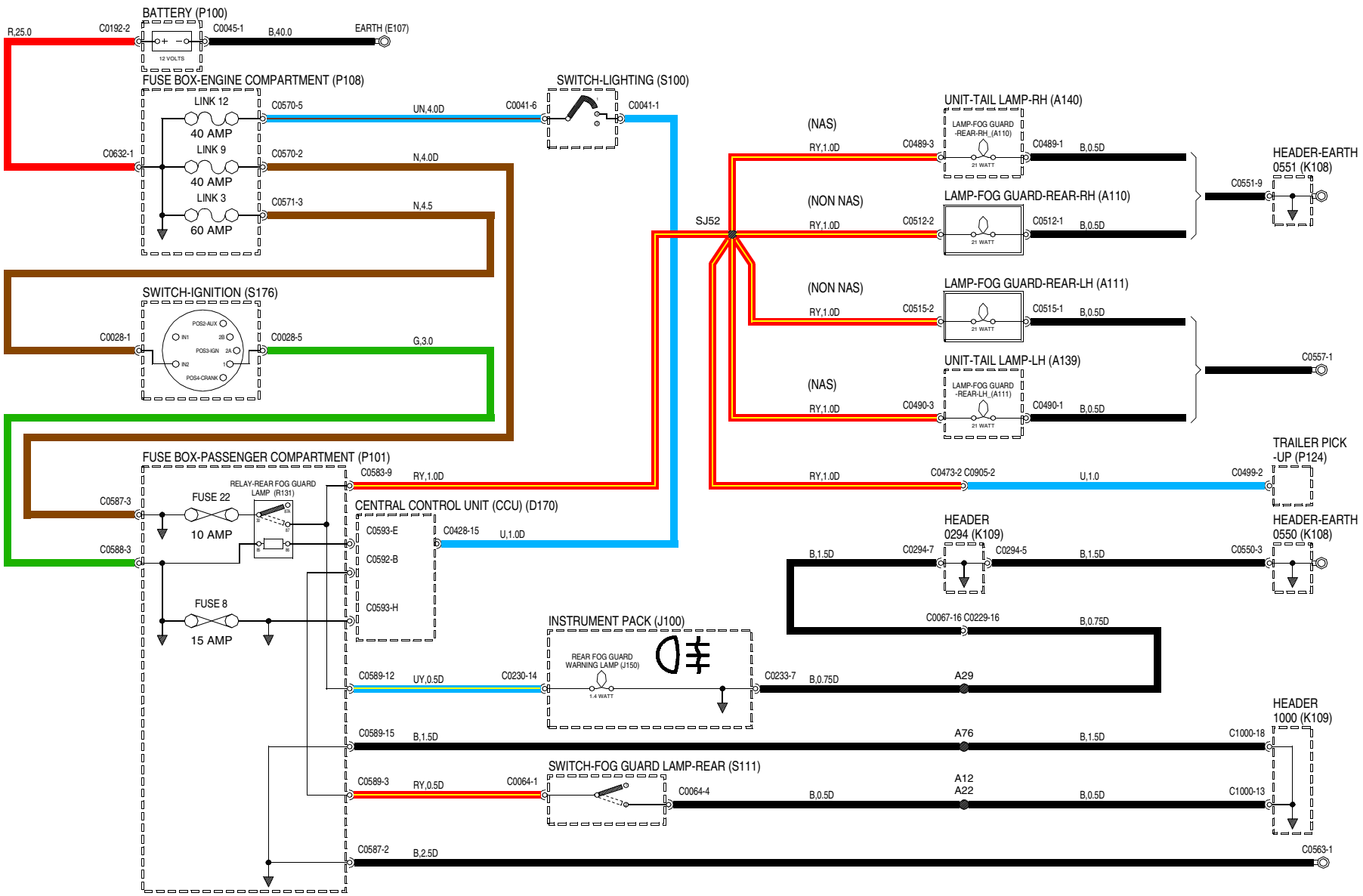
BATTERY (P100)
R,25.0
C0192-2
C0045-1
B,40.0
EARTH (E107)
12 VOLTS
FUSE BOX-ENGINE COMPARTMENT (P108)
LINK 12
40 AMP
LINK 9
40 AMP
LINK 3
60 AMP
C0570-5
UN,4.0D
C0041-6
C0632-1
C0570-2
N,4.0D
C0571-3
N,4.5
SWITCH-LIGHTING (S100)
C0041-1
SWITCH-IGNITION (S176)
POS2-AUX
IN1
2B
POS3-IGN
2A
IN2
1
POS4-CRANK
C0028-1
C0028-5
G,3.0
FUSE BOX-PASSENGER COMPARTMENT (P101)
RELAY-REAR FOG GUARD LAMP (R131)
FUSE 22
10 AMP
C0587-3
C0588-3
FUSE 8
15 AMP
C0583-9
RY,1.0D
CENTRAL CONTROL UNIT (CCU) (D170)
C0593-E
C0592-B
C0593-H
C0428-15
U,1.0D
SJ52
UNIT-TAIL LAMP-RH (A140)
(NAS)
LAMP-FOG GUARD -REAR-RH_(A110)
21 WATT
RY,1.0D
C0489-3
C0489-1
B,0.5D
HEADER-EARTH 0551 (K108)
C0551-9
(NON NAS)
LAMP-FOG GUARD-REAR-RH (A110)
RY,1.0D
C0512-2
C0512-1
B,0.5D
(NON NAS)
LAMP-FOG GUARD-REAR-LH (A111)
RY,1.0D
C0515-2
C0515-1
B,0.5D
C0557-1
UNIT-TAIL LAMP-LH (A139)
(NAS)
LAMP-FOG GUARD -REAR-LH_(A111)
RY,1.0D
C0490-3
C0490-1
B,0.5D
TRAILER PICK -UP (P124)
RY,1.0D
C0473-2 C0905-2
U,1.0
C0499-2
HEADER 0294 (K109)
B,1.5D
C0294-7
C0294-5
B,1.5D
HEADER-EARTH 0550 (K108)
C0550-3
C0067-16 C0229-16
B,0.75D
INSTRUMENT PACK (J100)
REAR FOG GUARD WARNING LAMP (J150)
1.4 WATT
C0589-12
UY,0.5D
C0230-14
C0233-7
B,0.75D
A29
HEADER 1000 (K109)
C0589-15
B,1.5D
A76
B,1.5D
C1000-18
SWITCH-FOG GUARD LAMP-REAR (S111)
C0589-3
RY,0.5D
C0064-1
C0064-4
B,0.5D
A12
A22
B,0.5D
C1000-13
C0587-2
B,2.5D
C0563-1
VWR004100-A-01

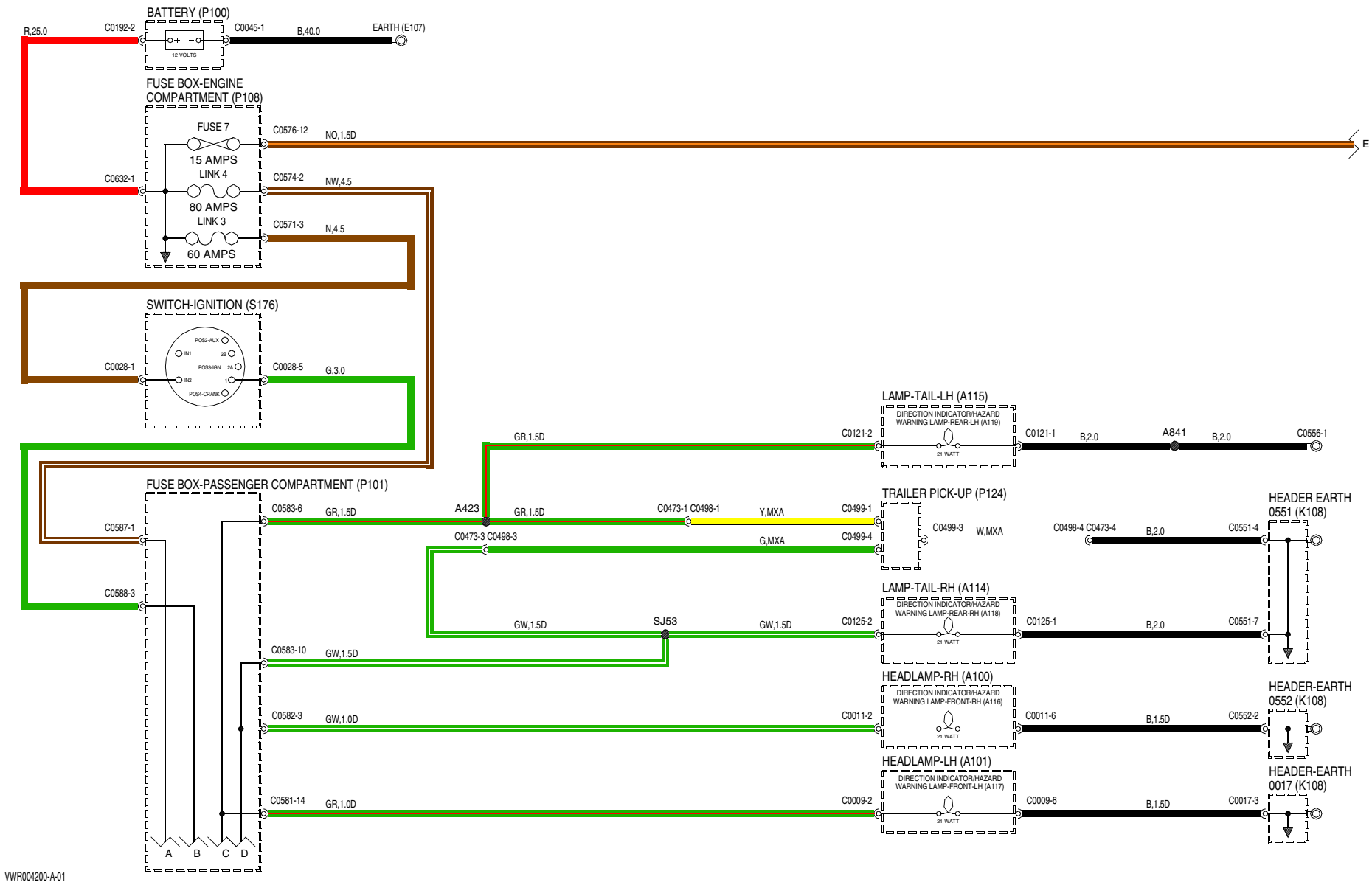
BATTERY (P100)
R,25.0
C0192-2
12 VOLTS
C0045-1
B,40.0
EARTH (E107)
FUSE BOX-ENGINE COMPARTMENT (P108)
FUSE 7
15 AMPS
LINK 4
80 AMPS
LINK 3
60 AMPS
C0632-1
C0576-12
NO,1.5D
E
C0574-2
NW,4.5
C0571-3
N,4.5
SWITCH-IGNITION (S176)
POS2-AUX
IN1
2B
POS3-IGN
2A
IN2
1
POS4-CRANK
C0028-1
C0028-5
G,3.0
LAMP-TAIL-LH (A115)
DIRECTION INDICATOR/HAZARD WARNING LAMP-REAR-LH (A119)
21 WATT
C0121-2
C0121-1
B,2.0
A841
B,2.0
C0556-1
GR,1.5D
FUSE BOX-PASSENGER COMPARTMENT (P101)
C0583-6
GR,1.5D
A423
GR,1.5D
C0473-1 C0498-1
Y,MXA
C0499-1
TRAILER PICK-UP (P124)
C0499-3
W,MXA
C0498-4 C0473-4
B,2.0
C0551-4
HEADER EARTH 0551 (K108)
C0587-1
C0473-3 C0498-3
G,MXA
C0499-4
C0588-3
LAMP-TAIL-RH (A114)
DIRECTION INDICATOR/HAZARD WARNING LAMP-REAR-RH (A118)
21 WATT
GW,1.5D
SJ53
GW,1.5D
C0125-2
C0125-1
B,2.0
C0551-7
C0583-10
GW,1.5D
HEADLAMP-RH (A100)
DIRECTION INDICATOR/HAZARD WARNING LAMP-FRONT-RH (A116)
21 WATT
C0582-3
GW,1.0D
C0011-2
C0011-6
B,1.5D
C0552-2
HEADER-EARTH 0552 (K108)
HEADLAMP-LH (A101)
DIRECTION INDICATOR/HAZARD WARNING LAMP-FRONT-LH (A117)
21 WATT
C0581-14
GR,1.0D
C0009-2
C0009-6
B,1.5D
C0017-3
HEADER-EARTH 0017 (K108)
A B C D
VWR004200-A-01

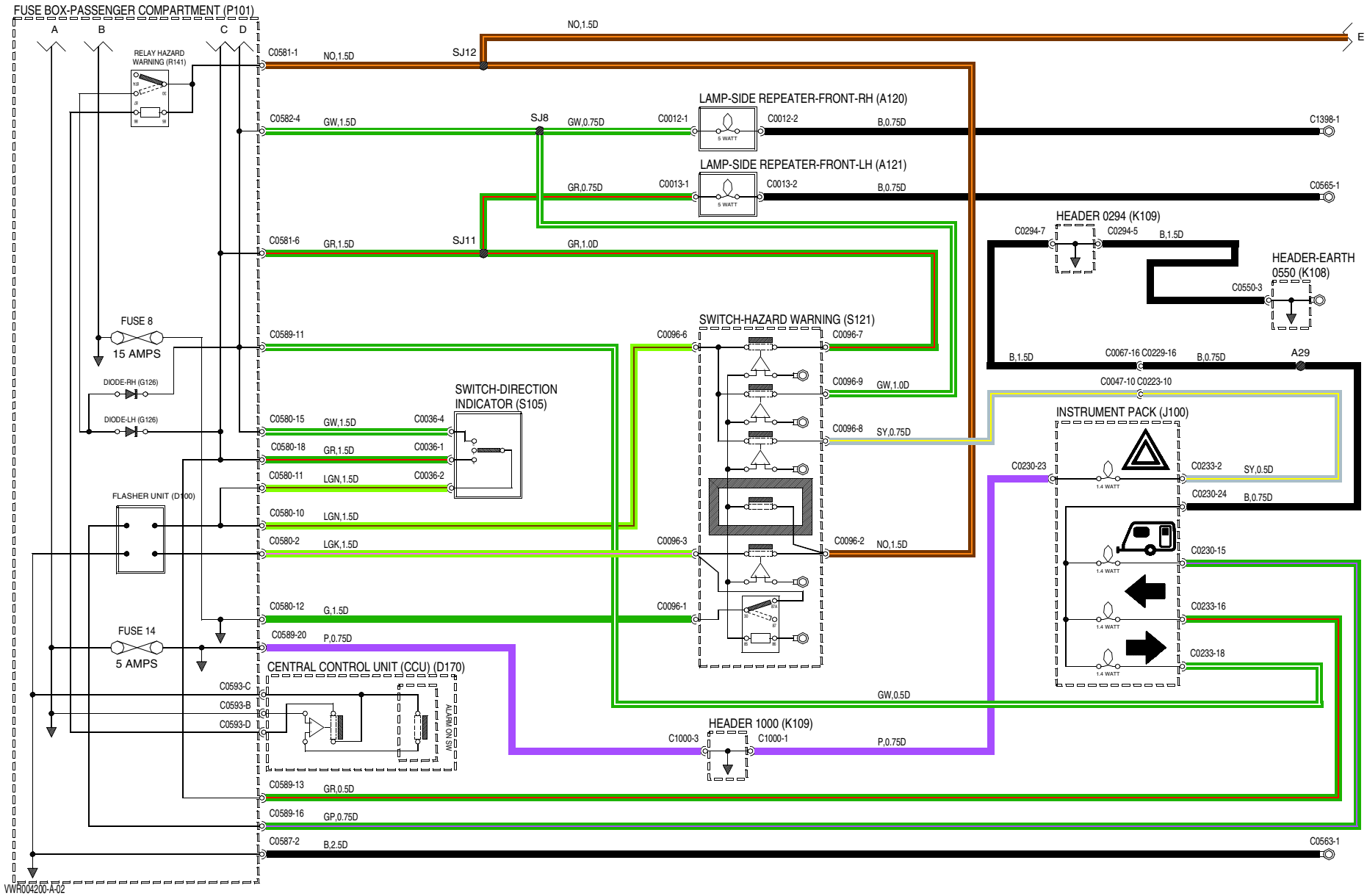
FUSE BOX-PASSENGER COMPARTMENT (P101)
A
B
C
D
RELAY HAZARD WARNING (R141)
C0581-1
NO,1.5D
SJ12
NO,1.5D
E
C0582-4
GW,1.5D
SJ8
GW,0.75D
C0012-1
LAMP-SIDE REPEATER-FRONT-RH (A120)
5 WATT
C0012-2
B,0.75D
C1398-1
GR,0.75D
C0013-1
LAMP-SIDE REPEATER-FRONT-LH (A121)
5 WATT
C0013-2
B,0.75D
C0565-1
C0581-6
GR,1.5D
SJ11
GR,1.0D
HEADER 0294 (K109)
C0294-7
C0294-5
B,1.5D
HEADER-EARTH 0550 (K108)
C0550-3
FUSE 8
15 AMPS
C0589-11
SWITCH-HAZARD WARNING (S121)
C0096-6
C0096-7
B,1.5D
C0067-16 C0229-16
B,0.75D
A29
C0047-10 C0223-10
DIODE-RH (G126)
DIODE-LH (G126)
SWITCH-DIRECTION INDICATOR (S105)
C0096-9
GW,1.0D
C0580-15
GW,1.5D
C0036-4
C0096-8
SY,0.75D
INSTRUMENT PACK (J100)
C0580-18
GR,1.5D
C0036-1
C0580-11
LGN,1.5D
C0036-2
C0230-23
C0233-2
SY,0.5D
1.4 WATT
C0230-24
B,0.75D
FLASHER UNIT (D100)
C0580-10
LGN,1.5D
C0580-2
LGK,1.5D
C0096-3
C0096-2
NO,1.5D
C0230-15
C0580-12
G,1.5D
C0096-1
C0233-16
FUSE 14
5 AMPS
C0589-20
P,0.75D
C0233-18
CENTRAL CONTROL UNIT (CCU) (D170)
C0593-C
C0593-B
C0593-D
ALARM ON SWS
GW,0.5D
HEADER 1000 (K109)
C1000-3
C1000-1
P,0.75D
C0589-13
GR,0.5D
C0589-16
GP,0.75D
C0587-2
B,2.5D
C0563-1
VWR004200-A-02

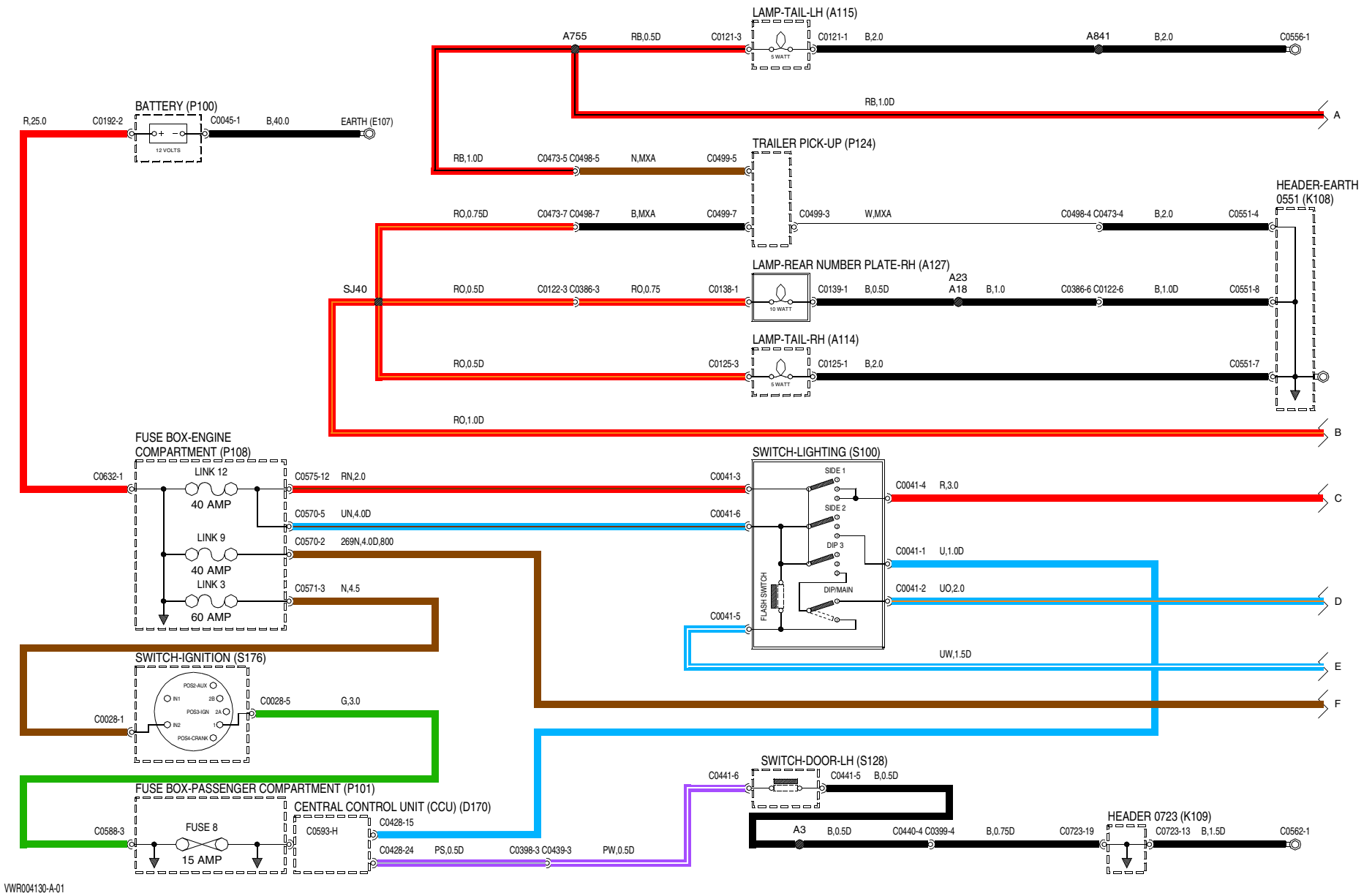
LAMP-TAIL-LH (A115)
A755
RB,0.5D
C0121-3
5 WATT
C0121-1
B,2.0
A841
B,2.0
C0556-1
RB,1.0D
A
BATTERY (P100)
R,25.0
C0192-2
12 VOLTS
C0045-1
B,40.0
EARTH (E107)
TRAILER PICK-UP (P124)
RB,1.0D
C0473-5 C0498-5
N,MXA
C0499-5
HEADER-EARTH
0551 (K108)
RO,0.75D
C0473-7 C0498-7
B,MXA
C0499-7
C0499-3
W,MXA
C0498-4 C0473-4
B,2.0
C0551-4
LAMP-REAR NUMBER PLATE-RH (A127)
SJ40
RO,0.5D
C0122-3 C0386-3
RO,0.75
C0138-1
10 WATT
C0139-1
B,0.5D
A23
A18
B,1.0
C0386-6 C0122-6
B,1.0D
C0551-8
LAMP-TAIL-RH (A114)
RO,0.5D
C0125-3
5 WATT
C0125-1
B,2.0
C0551-7
RO,1.0D
B
FUSE BOX-ENGINE
COMPARTMENT (P108)
C0632-1
LINK 12
40 AMP
C0575-12
RN,2.0
C0041-3
SWITCH-LIGHTING (S100)
SIDE 1
SIDE 2
DIP 3
DIP/MAIN
FLASH SWITCH
C0041-4
R,3.0
C
C0570-5
UN,4.0D
C0041-6
LINK 9
40 AMP
C0570-2
269N,4.0D,800
C0041-1
U,1.0D
LINK 3
60 AMP
C0571-3
N,4.5
C0041-2
UO,2.0
D
C0041-5
UW,1.5D
E
SWITCH-IGNITION (S176)
POS2-AUX
IN1
2B
POS3-IGN
2A
IN2
1
POS4-CRANK
C0028-1
C0028-5
G,3.0
F
SWITCH-DOOR-LH (S128)
C0441-6
C0441-5
B,0.5D
FUSE BOX-PASSENGER COMPARTMENT (P101)
CENTRAL CONTROL UNIT (CCU) (D170)
C0588-3
FUSE 8
15 AMP
C0593-H
C0428-15
C0428-24
PS,0.5D
C0398-3 C0439-3
PW,0.5D
A3
B,0.5D
C0440-4 C0399-4
B,0.75D
C0723-19
HEADER 0723 (K109)
C0723-13
B,1.5D
C0562-1
VWR004130-A-01

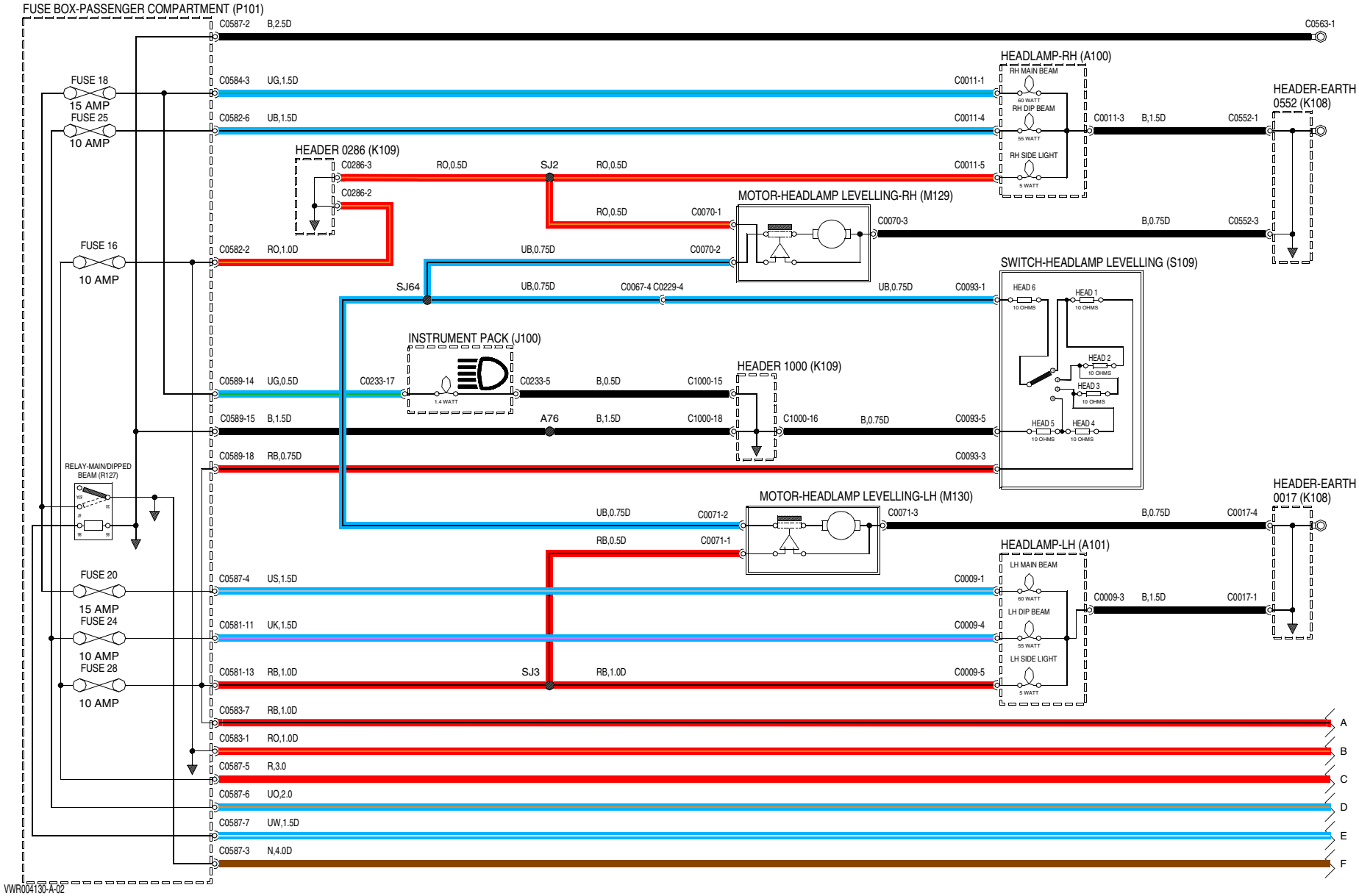
FUSE BOX-PASSENGER COMPARTMENT (P101)
C0587-2 B,2.5D
C0563-1
HEADLAMP-RH (A100)
RH MAIN BEAM
60 WATT
RH DIP BEAM
55 WATT
RH SIDE LIGHT
5 WATT
FUSE 18
15 AMP
FUSE 25
10 AMP
C0584-3 UG,1.5D
C0011-1
C0582-6 UB,1.5D
C0011-4
C0011-3 B,1.5D
C0552-1
HEADER-EARTH
0552 (K108)
HEADER 0286 (K109)
C0286-3 RO,0.5D
SJ2
RO,0.5D
C0011-5
C0286-2
MOTOR-HEADLAMP LEVELLING-RH (M129)
RO,0.5D
C0070-1
C0070-3
B,0.75D
C0552-3
FUSE 16
10 AMP
C0582-2 RO,1.0D
UB,0.75D
C0070-2
SWITCH-HEADLAMP LEVELLING (S109)
SJ64
UB,0.75D
C0067-4 C0229-4
UB,0.75D
C0093-1
HEAD 6
HEAD 1
10 OHMS
HEAD 2
HEAD 3
HEAD 5
HEAD 4
INSTRUMENT PACK (J100)
1.4 WATT
HEADER 1000 (K109)
C0589-14 UG,0.5D
C0233-17
C0233-5 B,0.5D
C1000-15
C0589-15 B,1.5D
A76
B,1.5D
C1000-18
C1000-16
B,0.75D
C0093-5
C0589-18 RB,0.75D
C0093-3
RELAY-MAIN/DIPPED
BEAM (R127)
MOTOR-HEADLAMP LEVELLING-LH (M130)
UB,0.75D
C0071-2
C0071-3
B,0.75D
C0017-4
HEADER-EARTH
0017 (K108)
RB,0.5D
C0071-1
HEADLAMP-LH (A101)
LH MAIN BEAM
LH DIP BEAM
LH SIDE LIGHT
FUSE 20
15 AMP
FUSE 24
10 AMP
FUSE 28
10 AMP
C0587-4 US,1.5D
C0009-1
C0009-3 B,1.5D
C0017-1
C0581-11 UK,1.5D
C0009-4
C0581-13 RB,1.0D
SJ3
RB,1.0D
C0009-5
C0583-7 RB,1.0D
C0583-1 RO,1.0D
C0587-5 R,3.0
C0587-6 UO,2.0
C0587-7 UW,1.5D
C0587-3 N,4.0D
A
B
C
D
E
F
VWR004130-A-02

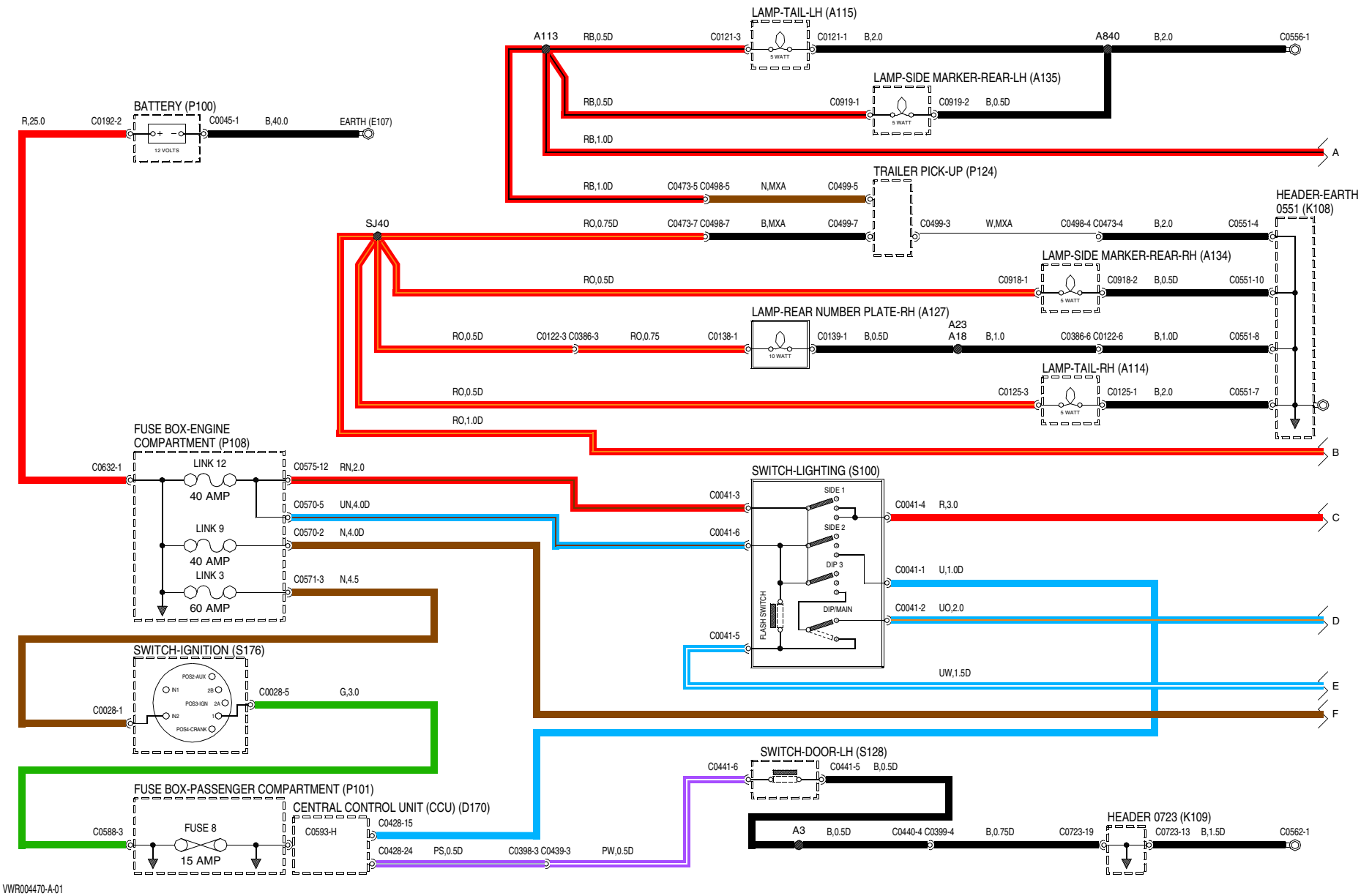
LAMP-TAIL-LH (A115)
A113
RB,0.5D
C0121-3
5 WATT
C0121-1
B,2.0
A840
B,2.0
C0556-1
LAMP-SIDE MARKER-REAR-LH (A135)
RB,0.5D
C0919-1
5 WATT
C0919-2
B,0.5D
RB,1.0D
A
BATTERY (P100)
R,25.0
C0192-2
12 VOLTS
C0045-1
B,40.0
EARTH (E107)
TRAILER PICK-UP (P124)
RB,1.0D
C0473-5 C0498-5
N,MXA
C0499-5
HEADER-EARTH
0551 (K108)
SJ40
RO,0.75D
C0473-7 C0498-7
B,MXA
C0499-7
C0499-3
W,MXA
C0498-4 C0473-4
B,2.0
C0551-4
LAMP-SIDE MARKER-REAR-RH (A134)
RO,0.5D
C0918-1
5 WATT
C0918-2
B,0.5D
C0551-10
LAMP-REAR NUMBER PLATE-RH (A127)
RO,0.5D
C0122-3 C0386-3
RO,0.75
C0138-1
10 WATT
C0139-1
B,0.5D
A23
A18
B,1.0
C0386-6 C0122-6
B,1.0D
C0551-8
LAMP-TAIL-RH (A114)
RO,0.5D
C0125-3
5 WATT
C0125-1
B,2.0
C0551-7
RO,1.0D
B
FUSE BOX-ENGINE
COMPARTMENT (P108)
C0632-1
LINK 12
40 AMP
C0575-12
RN,2.0
C0570-5
UN,4.0D
LINK 9
40 AMP
C0570-2
N,4.0D
LINK 3
60 AMP
C0571-3
N,4.5
SWITCH-LIGHTING (S100)
C0041-3
SIDE 1
C0041-4
R,3.0
C
C0041-6
SIDE 2
DIP 3
C0041-1
U,1.0D
FLASH SWITCH
DIP/MAIN
C0041-2
UO,2.0
D
C0041-5
UW,1.5D
E
F
SWITCH-IGNITION (S176)
POS2-AUX
IN1
2B
POS3-IGN
2A
IN2
1
POS4-CRANK
C0028-1
C0028-5
G,3.0
SWITCH-DOOR-LH (S128)
C0441-6
C0441-5
B,0.5D
FUSE BOX-PASSENGER COMPARTMENT (P101)
C0588-3
FUSE 8
15 AMP
CENTRAL CONTROL UNIT (CCU) (D170)
C0593-H
C0428-15
C0428-24
PS,0.5D
C0398-3 C0439-3
PW,0.5D
A3
B,0.5D
C0440-4 C0399-4
B,0.75D
C0723-19
HEADER 0723 (K109)
C0723-13
B,1.5D
C0562-1
VWR004470-A-01

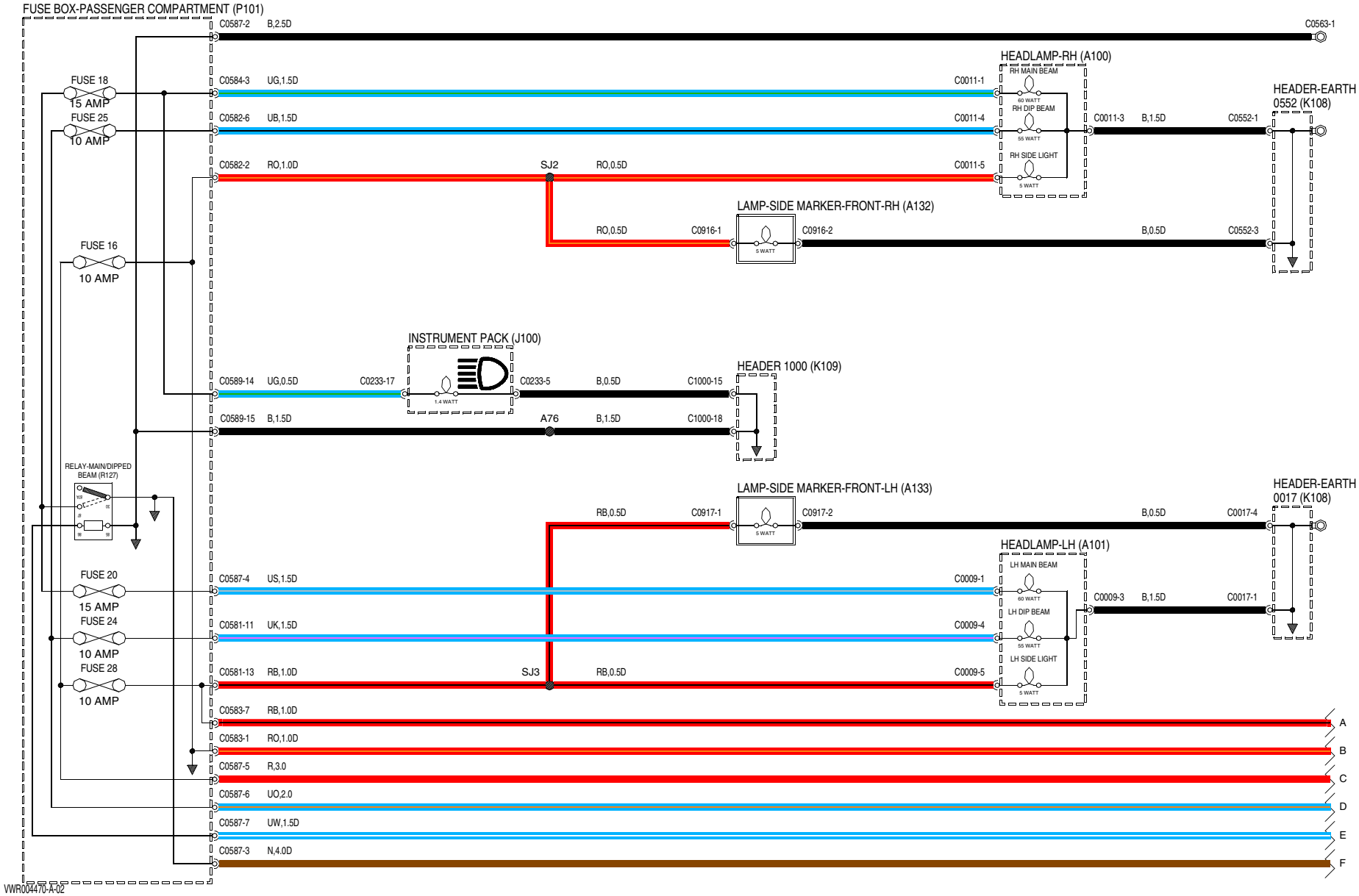
FUSE BOX-PASSENGER COMPARTMENT (P101)
C0587-2 B,2.5D
C0563-1
HEADLAMP-RH (A100)
RH MAIN BEAM
60 WATT
RH DIP BEAM
55 WATT
RH SIDE LIGHT
5 WATT
FUSE 18
15 AMP
FUSE 25
10 AMP
C0584-3 UG,1.5D
C0011-1
C0582-6 UB,1.5D
C0011-4
C0011-3 B,1.5D C0552-1
HEADER-EARTH
0552 (K108)
C0582-2 RO,1.0D
SJ2
RO,0.5D
C0011-5
LAMP-SIDE MARKER-FRONT-RH (A132)
RO,0.5D C0916-1
C0916-2
5 WATT
B,0.5D C0552-3
FUSE 16
10 AMP
INSTRUMENT PACK (J100)
1.4 WATT
HEADER 1000 (K109)
C0589-14 UG,0.5D C0233-17
C0233-5 B,0.5D C1000-15
C0589-15 B,1.5D
A76
B,1.5D C1000-18
RELAY-MAIN/DIPPED
BEAM (R127)
LAMP-SIDE MARKER-FRONT-LH (A133)
RB,0.5D C0917-1
C0917-2
5 WATT
B,0.5D C0017-4
HEADER-EARTH
0017 (K108)
HEADLAMP-LH (A101)
LH MAIN BEAM
60 WATT
LH DIP BEAM
55 WATT
LH SIDE LIGHT
5 WATT
FUSE 20
15 AMP
FUSE 24
10 AMP
FUSE 28
10 AMP
C0587-4 US,1.5D
C0009-1
C0009-3 B,1.5D C0017-1
C0581-11 UK,1.5D
C0009-4
C0581-13 RB,1.0D
SJ3
RB,0.5D
C0009-5
C0583-7 RB,1.0D
C0583-1 RO,1.0D
C0587-5 R,3.0
C0587-6 UO,2.0
C0587-7 UW,1.5D
C0587-3 N,4.0D
A
B
C
D
E
F
VWR004470-A-02

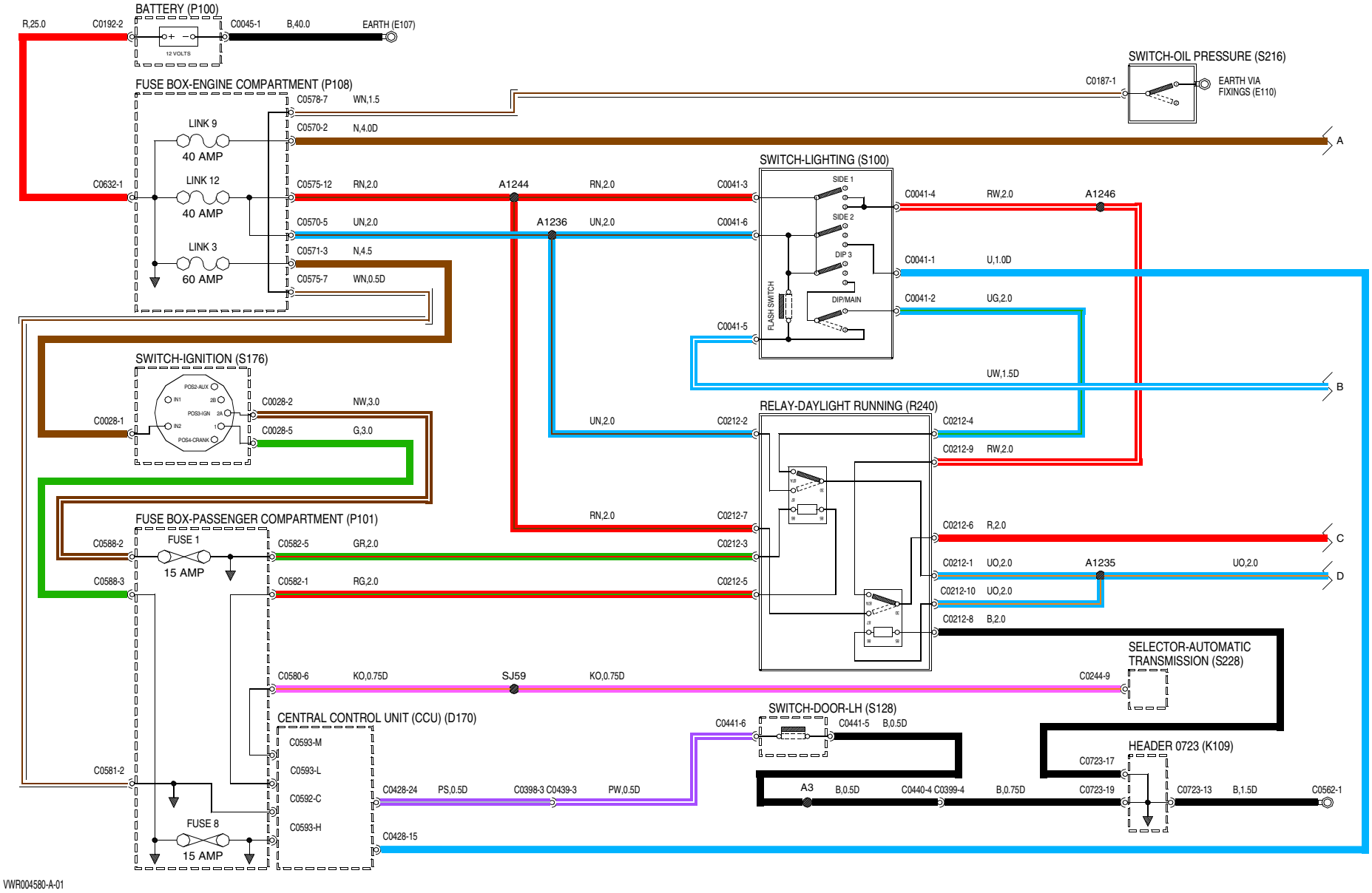
BATTERY (P100)
R,25.0
C0192-2
C0045-1
B,40.0
EARTH (E107)
12 VOLTS
SWITCH-OIL PRESSURE (S216)
C0187-1
EARTH VIA FIXINGS (E110)
FUSE BOX-ENGINE COMPARTMENT (P108)
C0578-7
WN,1.5
LINK 9
40 AMP
C0570-2
N,4.0D
A
C0632-1
LINK 12
40 AMP
C0575-12
RN,2.0
A1244
RN,2.0
C0041-3
SWITCH-LIGHTING (S100)
SIDE 1
SIDE 2
DIP 3
DIP/MAIN
FLASH SWITCH
C0041-4
RW,2.0
A1246
C0570-5
UN,2.0
A1236
UN,2.0
C0041-6
LINK 3
60 AMP
C0571-3
N,4.5
C0575-7
WN,0.5D
C0041-1
U,1.0D
C0041-2
UG,2.0
C0041-5
UW,1.5D
B
SWITCH-IGNITION (S176)
POS2-AUX
IN1
2B
POS3-IGN
2A
IN2
1
POS4-CRANK
C0028-1
C0028-2
NW,3.0
C0028-5
G,3.0
RELAY-DAYLIGHT RUNNING (R240)
UN,2.0
C0212-2
C0212-4
C0212-9
RW,2.0
FUSE BOX-PASSENGER COMPARTMENT (P101)
RN,2.0
C0212-7
C0588-2
FUSE 1
15 AMP
C0582-5
GR,2.0
C0212-3
C0212-6
R,2.0
C
C0588-3
C0582-1
RG,2.0
C0212-5
C0212-1
UO,2.0
A1235
UO,2.0
D
C0212-10
UO,2.0
C0212-8
B,2.0
SELECTOR-AUTOMATIC TRANSMISSION (S228)
C0580-6
KO,0.75D
SJ59
KO,0.75D
C0244-9
CENTRAL CONTROL UNIT (CCU) (D170)
SWITCH-DOOR-LH (S128)
C0441-6
C0441-5
B,0.5D
C0593-M
C0593-L
C0581-2
C0592-C
C0593-H
C0428-24
PS,0.5D
C0398-3
C0439-3
PW,0.5D
A3
B,0.5D
C0440-4
C0399-4
B,0.75D
HEADER 0723 (K109)
C0723-17
C0723-19
C0723-13
B,1.5D
C0562-1
FUSE 8
15 AMP
C0428-15
VWR004580-A-01

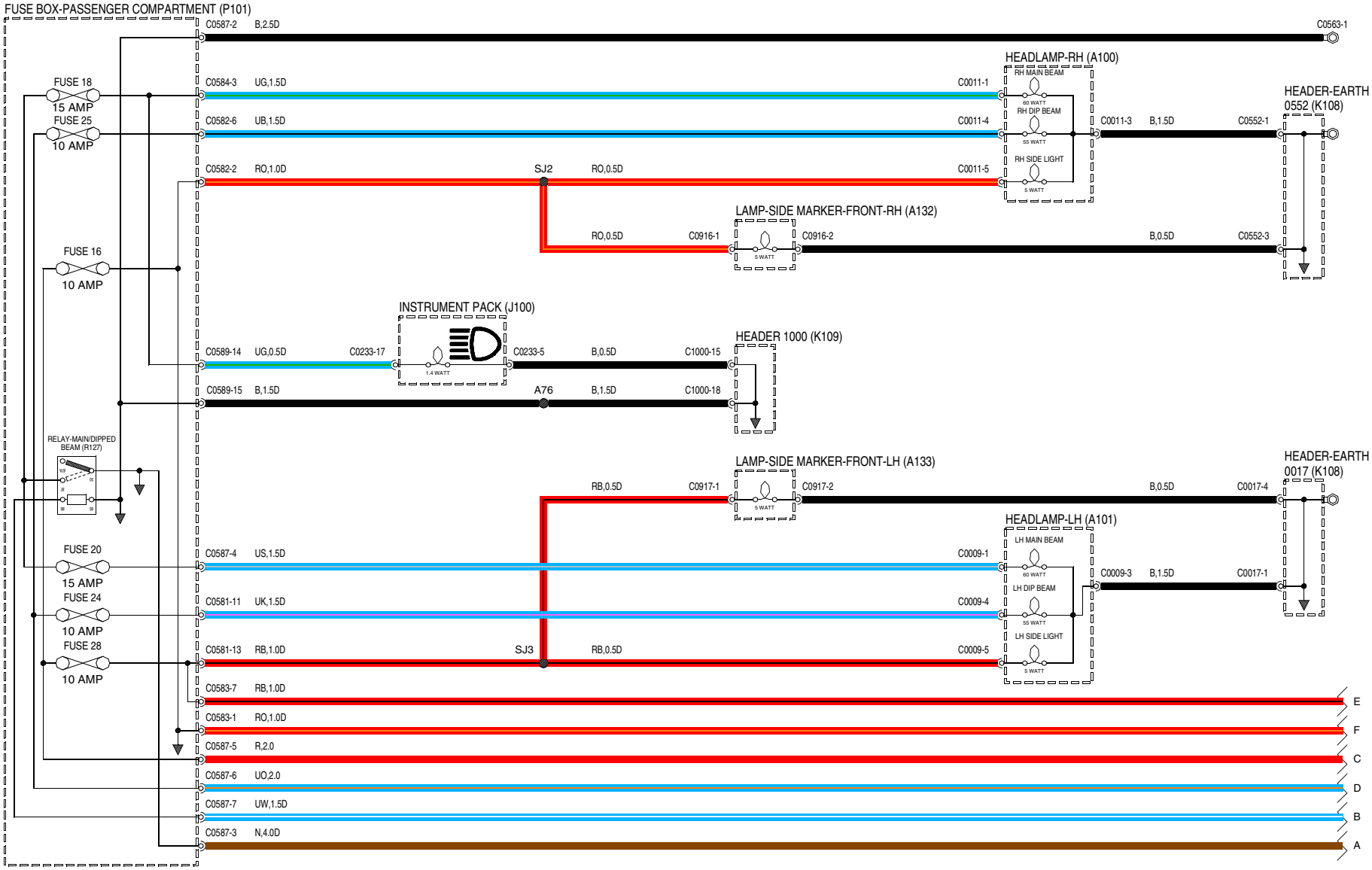
FUSE BOX-PASSENGER COMPARTMENT (P101)
C0587-2 B,2.5D
C0563-1
HEADLAMP-RH (A100)
RH MAIN BEAM
60 WATT
RH DIP BEAM
55 WATT
RH SIDE LIGHT
5 WATT
FUSE 18
15 AMP
FUSE 25
10 AMP
C0584-3 UG,1.5D
C0011-1
C0582-6 UB,1.5D
C0011-4
C0011-3 B,1.5D C0552-1
HEADER-EARTH
0552 (K108)
C0582-2 RO,1.0D
SJ2
RO,0.5D
C0011-5
LAMP-SIDE MARKER-FRONT-RH (A132)
RO,0.5D C0916-1
5 WATT
C0916-2
B,0.5D C0552-3
FUSE 16
10 AMP
INSTRUMENT PACK (J100)
1.4 WATT
HEADER 1000 (K109)
C0589-14 UG,0.5D C0233-17
C0233-5 B,0.5D C1000-15
C0589-15 B,1.5D
A76
B,1.5D C1000-18
RELAY-MAIN/DIPPED
BEAM (R127)
LAMP-SIDE MARKER-FRONT-LH (A133)
RB,0.5D C0917-1
C0917-2
B,0.5D C0017-4
HEADER-EARTH
0017 (K108)
HEADLAMP-LH (A101)
LH MAIN BEAM
LH DIP BEAM
LH SIDE LIGHT
FUSE 20
15 AMP
FUSE 24
10 AMP
FUSE 28
10 AMP
C0587-4 US,1.5D
C0009-1
C0009-3 B,1.5D C0017-1
C0581-11 UK,1.5D
C0009-4
C0581-13 RB,1.0D
SJ3
RB,0.5D
C0009-5
C0583-7 RB,1.0D
C0583-1 RO,1.0D
C0587-5 R,2.0
C0587-6 UO,2.0
C0587-7 UW,1.5D
C0587-3 N,4.0D
E
F
C
D
B
A
VWR004580-A-02

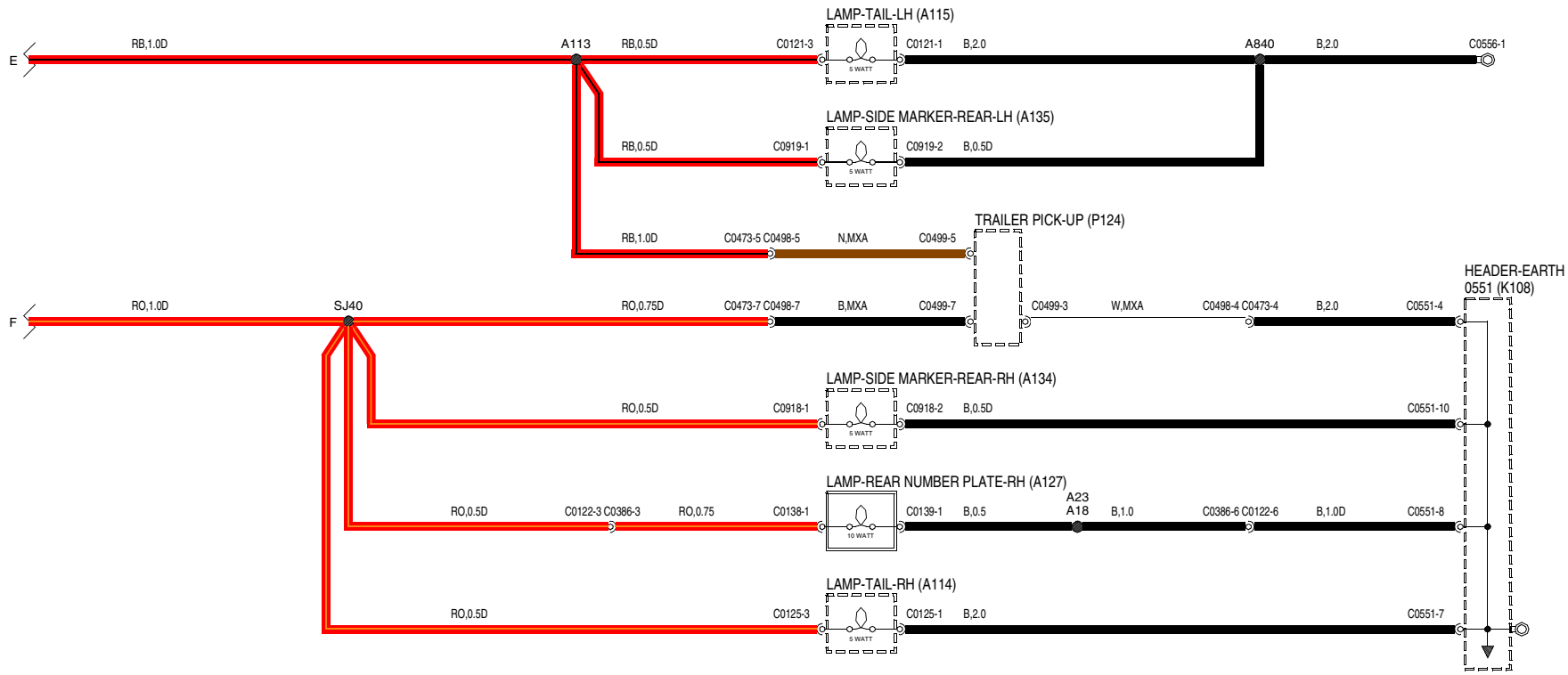

VWR004580-A-03

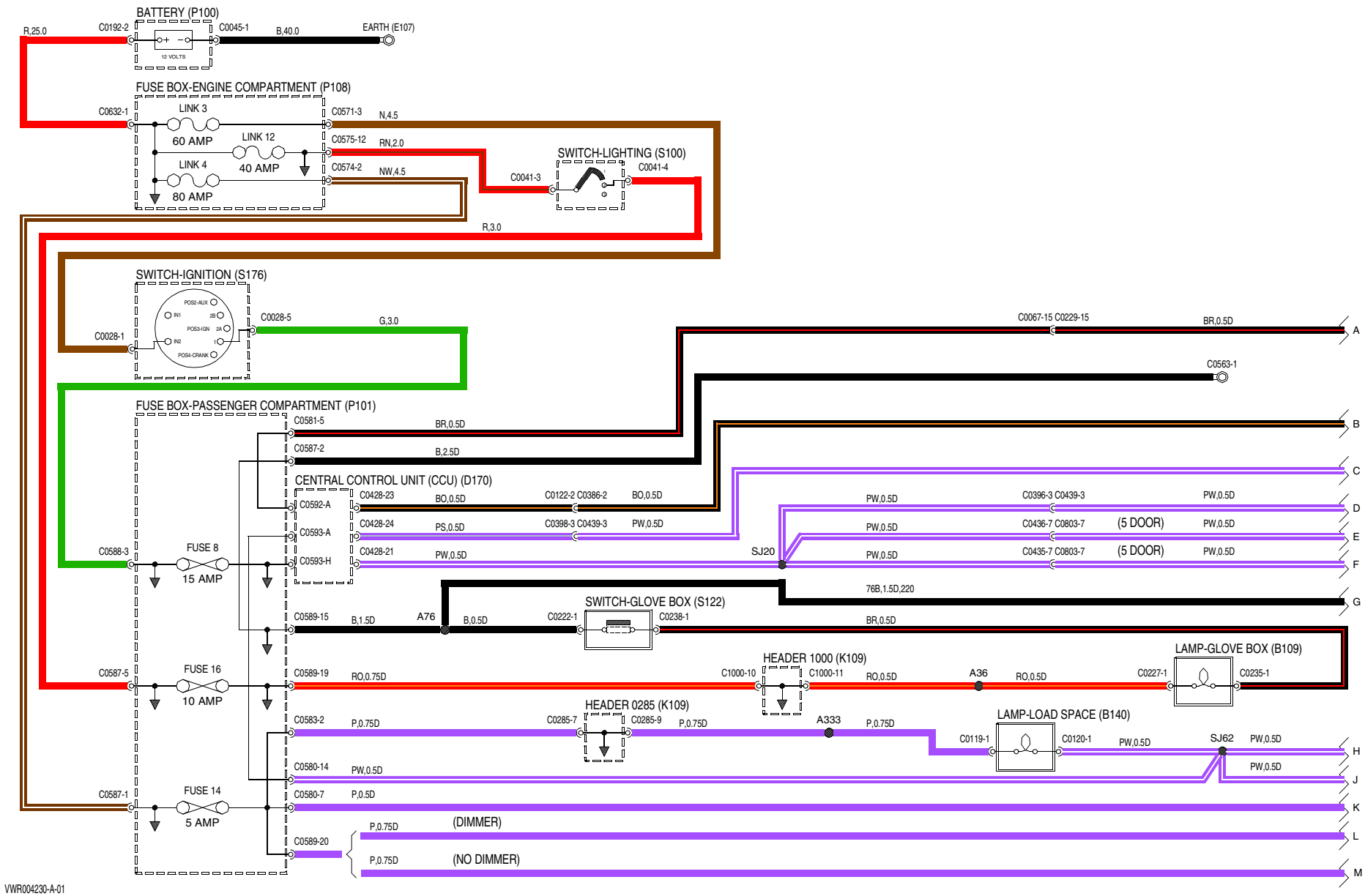
BATTERY (P100)
R,25.0
C0192-2
12 VOLTS
C0045-1
B,40.0
EARTH (E107)
FUSE BOX-ENGINE COMPARTMENT (P108)
C0632-1
LINK 3
60 AMP
LINK 12
40 AMP
LINK 4
80 AMP
C0571-3
N,4.5
C0575-12
RN,2.0
C0574-2
NW,4.5
SWITCH-LIGHTING (S100)
C0041-3
C0041-4
R,3.0
SWITCH-IGNITION (S176)
POS2-AUX
IN1
2B
POS3-IGN
9A
IN2
1
POS4-CRANK
C0028-1
C0028-5
G,3.0
C0067-15 C0229-15
BR,0.5D
A
C0563-1
FUSE BOX-PASSENGER COMPARTMENT (P101)
C0581-5
BR,0.5D
B
C0587-2
B,2.5D
C
CENTRAL CONTROL UNIT (CCU) (D170)
C0592-A
C0428-23
BO,0.5D
C0122-2 C0386-2
BO,0.5D
PW,0.5D
C0396-3 C0439-3
PW,0.5D
D
C0593-A
C0428-24
PS,0.5D
C0398-3 C0439-3
PW,0.5D
PW,0.5D
C0436-7 C0803-7
(5 DOOR)
PW,0.5D
E
C0588-3
FUSE 8
15 AMP
C0593-H
C0428-21
PW,0.5D
SJ20
PW,0.5D
C0435-7 C0803-7
(5 DOOR)
PW,0.5D
F
76B,1.5D,220
G
SWITCH-GLOVE BOX (S122)
C0589-15
B,1.5D
A76
B,0.5D
C0222-1
C0238-1
BR,0.5D
LAMP-GLOVE BOX (B109)
HEADER 1000 (K109)
C0587-5
FUSE 16
10 AMP
C0589-19
RO,0.75D
C1000-10
C1000-11
RO,0.5D
A36
RO,0.5D
C0227-1
C0235-1
HEADER 0285 (K109)
C0583-2
P,0.75D
C0285-7
C0285-9
P,0.75D
A333
P,0.75D
LAMP-LOAD SPACE (B140)
C0119-1
C0120-1
PW,0.5D
SJ62
PW,0.5D
H
C0580-14
PW,0.5D
PW,0.5D
J
C0587-1
FUSE 14
5 AMP
C0580-7
P,0.5D
K
C0589-20
P,0.75D
(DIMMER)
L
P,0.75D
(NO DIMMER)
M
VWR004230-A-01

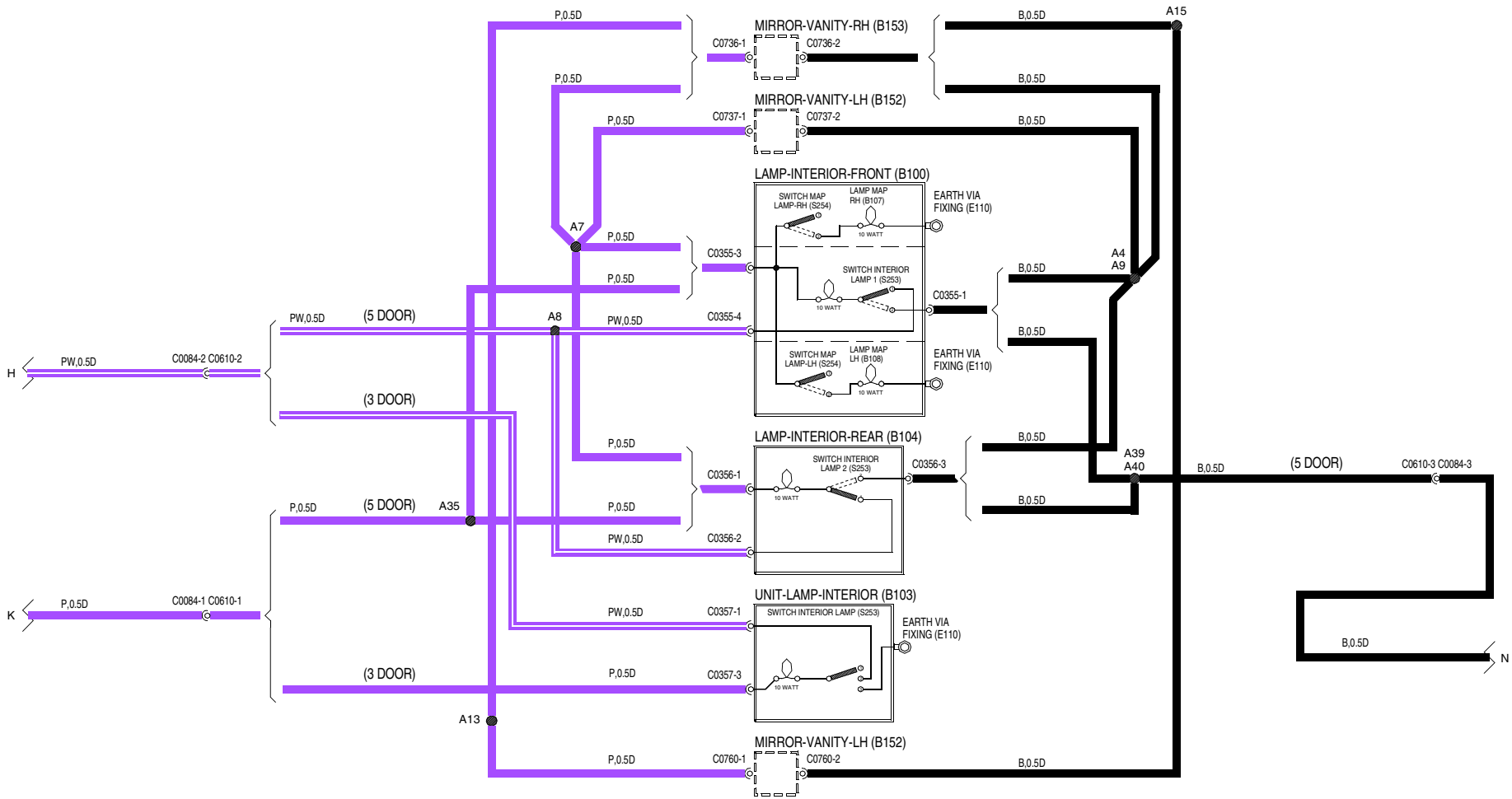

VWR004230-A-02

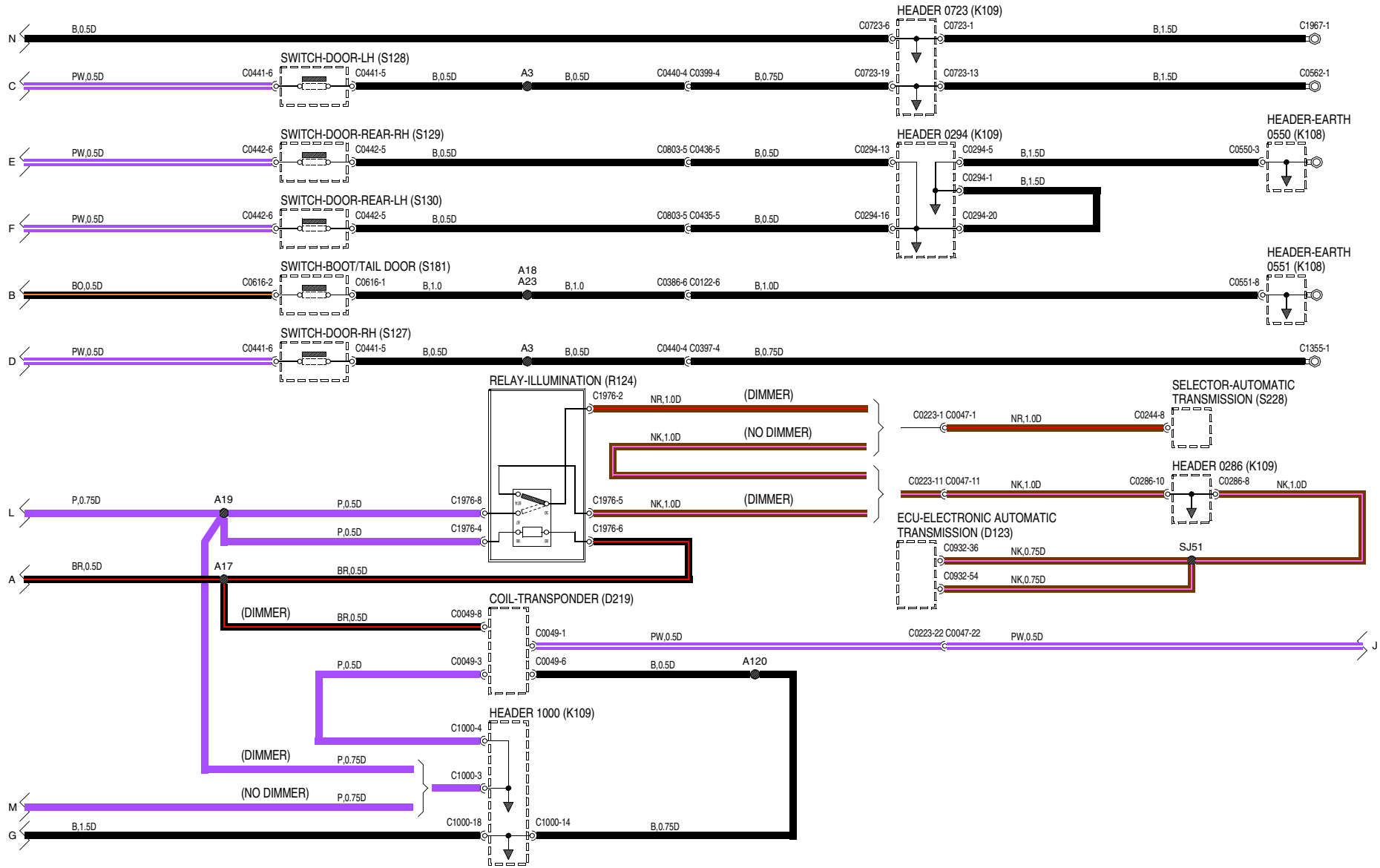
HEADER 0723 (K109)
N
B,0.5D
C0723-6
C0723-1
B,1.5D
C1967-1
SWITCH-DOOR-LH (S128)
C
PW,0.5D
C0441-6
C0441-5
B,0.5D
A3
B,0.5D
C0440-4 C0399-4
B,0.75D
C0723-19
C0723-13
B,1.5D
C0562-1
HEADER-EARTH
0550 (K108)
SWITCH-DOOR-REAR-RH (S129)
HEADER 0294 (K109)
E
PW,0.5D
C0442-6
C0442-5
B,0.5D
C0803-5 C0436-5
B,0.5D
C0294-13
C0294-5
B,1.5D
C0550-3
C0294-1
B,1.5D
SWITCH-DOOR-REAR-LH (S130)
F
PW,0.5D
C0442-6
C0442-5
B,0.5D
C0803-5 C0435-5
B,0.5D
C0294-16
C0294-20
HEADER-EARTH
0551 (K108)
SWITCH-BOOT/TAIL DOOR (S181)
B
BO,0.5D
C0616-2
C0616-1
B,1.0
A18
A23
B,1.0
C0386-6 C0122-6
B,1.0D
C0551-8
SWITCH-DOOR-RH (S127)
D
PW,0.5D
C0441-6
C0441-5
B,0.5D
A3
B,0.5D
C0440-4 C0397-4
B,0.75D
C1355-1
RELAY-ILLUMINATION (R124)
C1976-2
NR,1.0D
(DIMMER)
NK,1.0D
(NO DIMMER)
SELECTOR-AUTOMATIC
TRANSMISSION (S228)
C0223-1 C0047-1
NR,1.0D
C0244-8
HEADER 0286 (K109)
C0223-11 C0047-11
NK,1.0D
C0286-10
C0286-8
NK,1.0D
L
P,0.75D
A19
P,0.5D
C1976-8
C1976-5
NK,1.0D
(DIMMER)
P,0.5D
C1976-4
C1976-6
ECU-ELECTRONIC AUTOMATIC
TRANSMISSION (D123)
C0932-36
NK,0.75D
SJ51
A
BR,0.5D
A17
BR,0.5D
C0932-54
NK,0.75D
COIL-TRANSPONDER (D219)
(DIMMER)
BR,0.5D
C0049-8
C0049-1
PW,0.5D
C0223-22 C0047-22
PW,0.5D
J
P,0.5D
C0049-3
C0049-6
B,0.5D
A120
HEADER 1000 (K109)
C1000-4
(DIMMER)
P,0.75D
C1000-3
M
(NO DIMMER)
P,0.75D
G
B,1.5D
C1000-18
C1000-14
B,0.75D
VWR004230-A-03

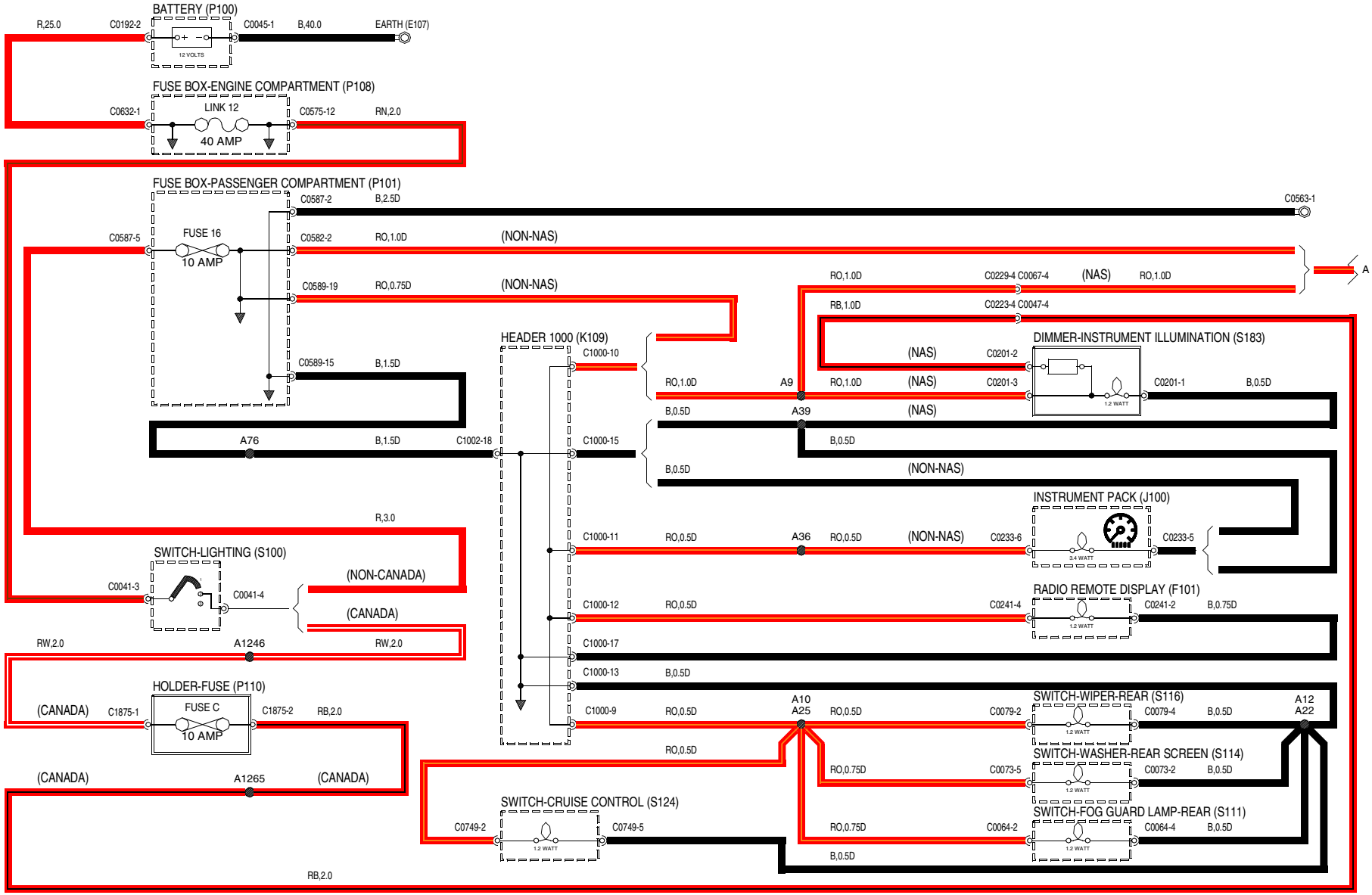

VWR004220-A-01

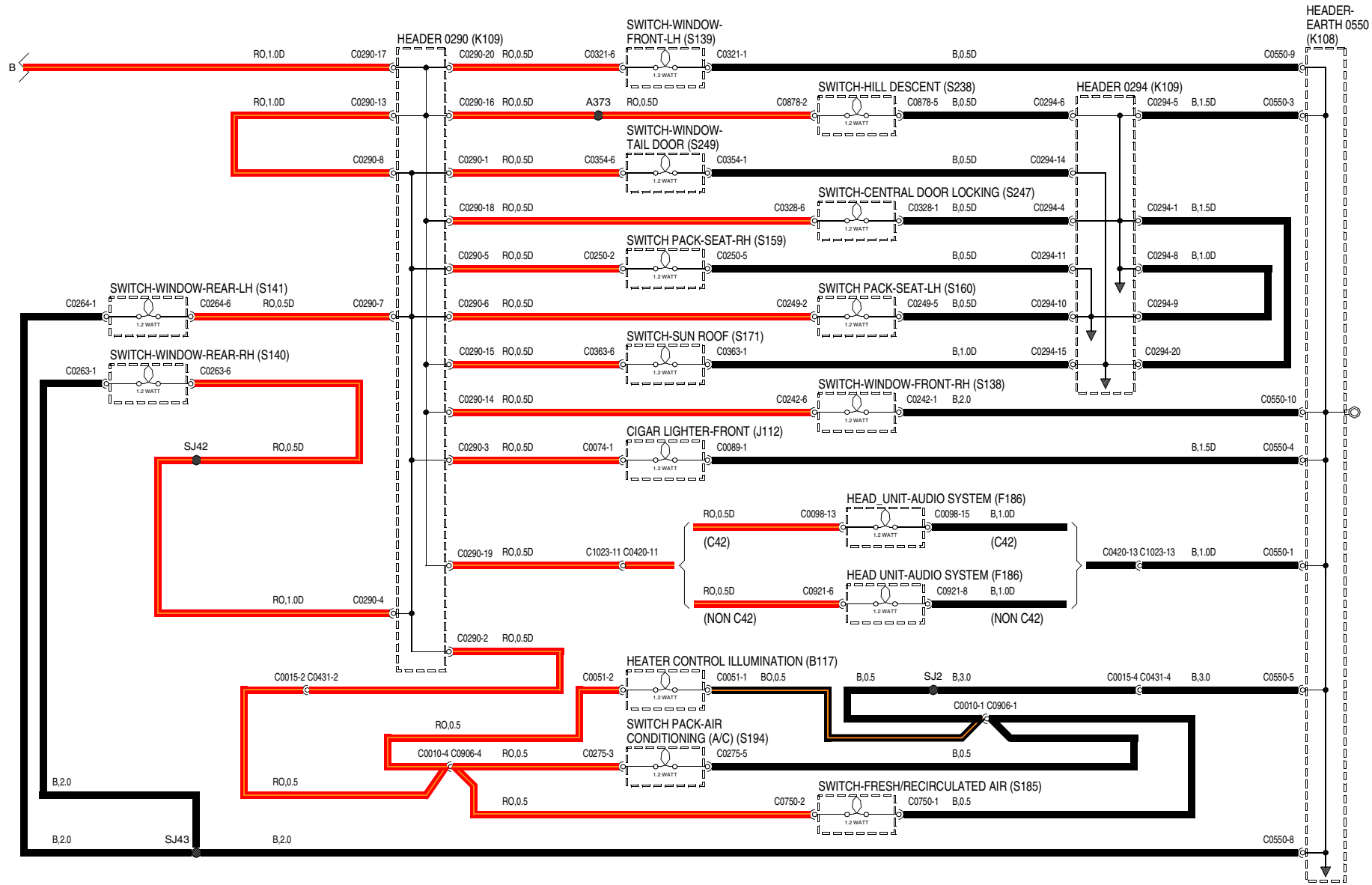
HEADER 0290 (K109)
HEADER-EARTH 0550 (K108)
HEADER 0294 (K109)
SWITCH-WINDOW-FRONT-LH (S139)
SWITCH-HILL DESCENT (S238)
SWITCH-WINDOW-TAIL DOOR (S249)
SWITCH-CENTRAL DOOR LOCKING (S247)
SWITCH PACK-SEAT-RH (S159)
SWITCH-WINDOW-REAR-LH (S141)
SWITCH PACK-SEAT-LH (S160)
SWITCH-SUN ROOF (S171)
SWITCH-WINDOW-REAR-RH (S140)
SWITCH-WINDOW-FRONT-RH (S138)
CIGAR LIGHTER-FRONT (J112)
HEAD_UNIT-AUDIO SYSTEM (F186)
HEAD UNIT-AUDIO SYSTEM (F186)
(C42)
(NON C42)
HEATER CONTROL ILLUMINATION (B117)
SWITCH PACK-AIR CONDITIONING (A/C) (S194)
SWITCH-FRESH/RECIRCULATED AIR (S185)
1.2 WATT
B
A373
SJ42
SJ2
SJ43
VWR004220-A-02

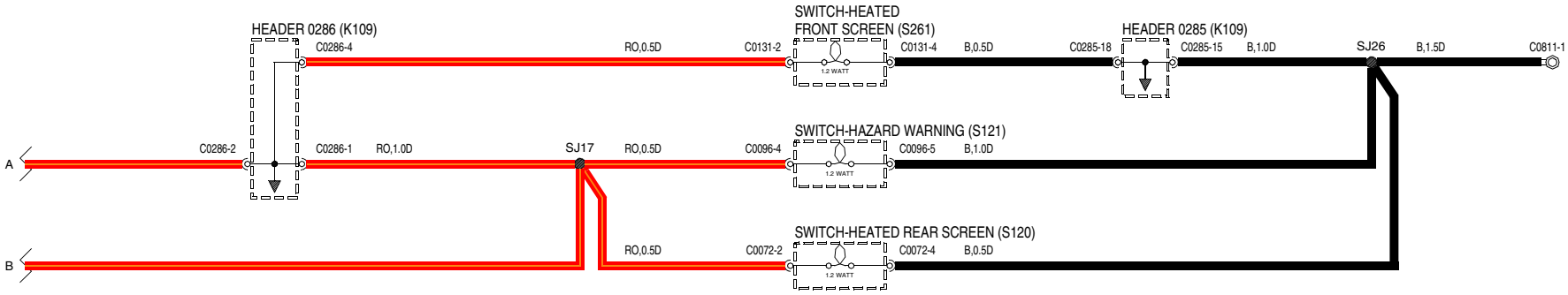

VWR004220-A-03

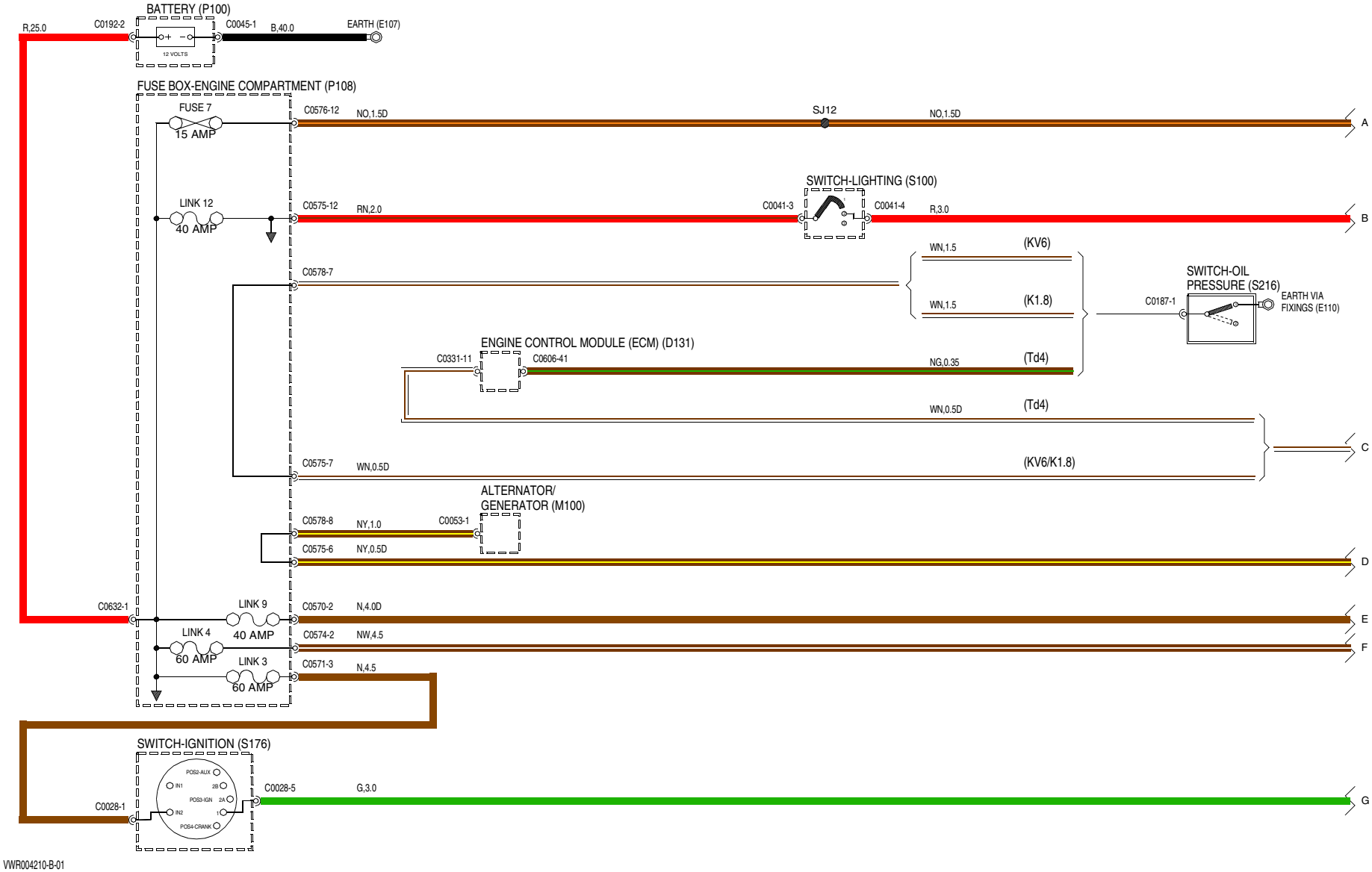
BATTERY (P100)
R,25.0
C0192-2
12 VOLTS
C0045-1
B,40.0
EARTH (E107)
FUSE BOX-ENGINE COMPARTMENT (P108)
FUSE 7
15 AMP
C0576-12
NO,1.5D
SJ12
NO,1.5D
A
SWITCH-LIGHTING (S100)
LINK 12
40 AMP
C0575-12
RN,2.0
C0041-3
C0041-4
R,3.0
B
WN,1.5
(KV6)
C0578-7
SWITCH-OIL
PRESSURE (S216)
WN,1.5
(K1.8)
C0187-1
EARTH VIA
FIXINGS (E110)
ENGINE CONTROL MODULE (ECM) (D131)
C0331-11
C0606-41
NG,0.35
(Td4)
WN,0.5D
(Td4)
C
C0575-7
WN,0.5D
(KV6/K1.8)
ALTERNATOR/
GENERATOR (M100)
C0578-8
NY,1.0
C0053-1
C0575-6
NY,0.5D
D
C0632-1
LINK 9
40 AMP
C0570-2
N,4.0D
E
LINK 4
60 AMP
C0574-2
NW,4.5
F
LINK 3
60 AMP
C0571-3
N,4.5
SWITCH-IGNITION (S176)
POS2-AUX
IN1
2B
POS3-IGN
2A
IN2
1
POS4-CRANK
C0028-1
C0028-5
G,3.0
G
VWR004210-B-01

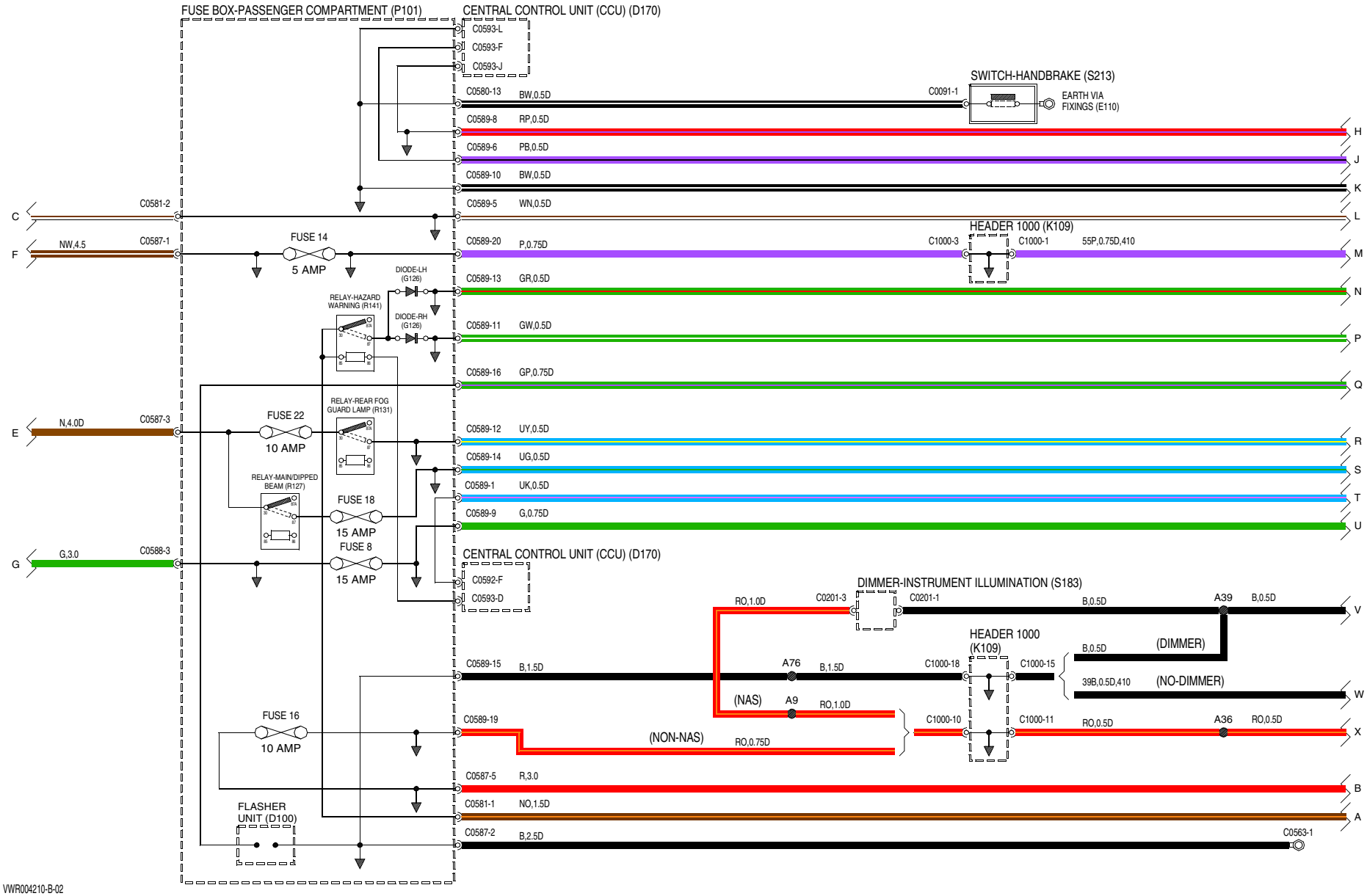
FUSE BOX-PASSENGER COMPARTMENT (P101)
CENTRAL CONTROL UNIT (CCU) (D170)
C0593-L
C0593-F
C0593-J
SWITCH-HANDBRAKE (S213)
C0580-13 BW,0.5D
C0091-1
EARTH VIA FIXINGS (E110)
C0589-8 RP,0.5D
C0589-6 PB,0.5D
C0589-10 BW,0.5D
C0589-5 WN,0.5D
C0581-2
C
L
HEADER 1000 (K109)
C0589-20 P,0.75D
C1000-3
C1000-1
55P,0.75D,410
M
NW,4.5
C0587-1
F
FUSE 14
5 AMP
DIODE-LH (G126)
DIODE-RH (G126)
RELAY-HAZARD WARNING (R141)
C0589-13 GR,0.5D
N
C0589-11 GW,0.5D
P
C0589-16 GP,0.75D
Q
RELAY-REAR FOG GUARD LAMP (R131)
N,4.0D
C0587-3
E
FUSE 22
10 AMP
C0589-12 UY,0.5D
R
C0589-14 UG,0.5D
S
RELAY-MAIN/DIPPED BEAM (R127)
C0589-1 UK,0.5D
T
FUSE 18
15 AMP
C0589-9 G,0.75D
U
FUSE 8
15 AMP
G,3.0
C0588-3
G
CENTRAL CONTROL UNIT (CCU) (D170)
C0592-F
C0593-D
DIMMER-INSTRUMENT ILLUMINATION (S183)
RO,1.0D
C0201-3
C0201-1
B,0.5D
A39
B,0.5D
V
HEADER 1000 (K109)
B,0.5D
(DIMMER)
C0589-15 B,1.5D
A76
B,1.5D
C1000-18
C1000-15
39B,0.5D,410
(NO-DIMMER)
W
(NAS)
A9
RO,1.0D
FUSE 16
10 AMP
C0589-19
C1000-10
C1000-11
RO,0.5D
A36
RO,0.5D
X
(NON-NAS)
RO,0.75D
C0587-5 R,3.0
B
FLASHER UNIT (D100)
C0581-1 NO,1.5D
A
C0587-2 B,2.5D
C0563-1
VWR004210-B-02

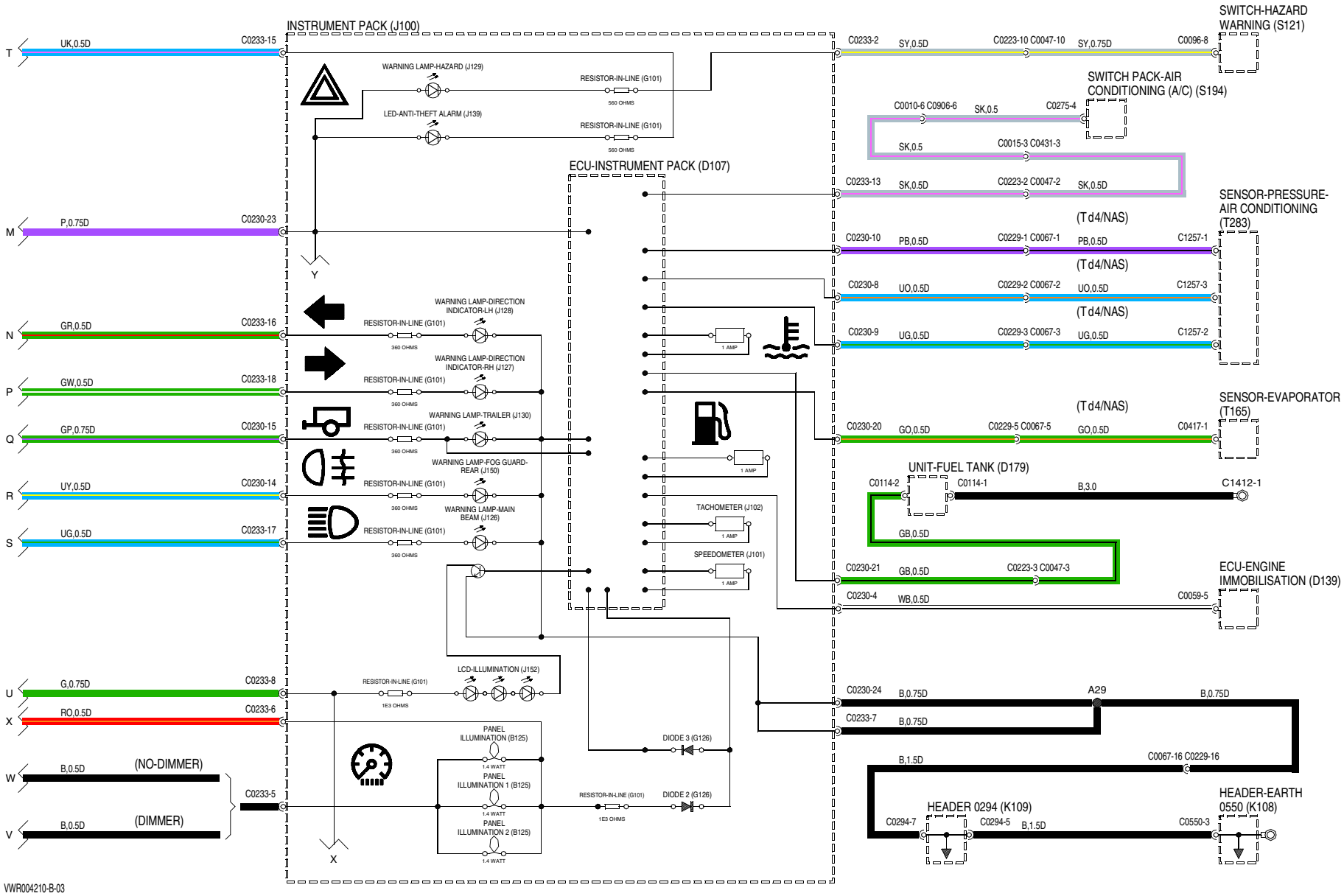
INSTRUMENT PACK (J100)
T
UK,0.5D
C0233-15
WARNING LAMP-HAZARD (J129)
RESISTOR-IN-LINE (G101)
560 OHMS
LED-ANTI-THEFT ALARM (J139)
RESISTOR-IN-LINE (G101)
560 OHMS
ECU-INSTRUMENT PACK (D107)
M
P,0.75D
C0230-23
Y
N
GR,0.5D
C0233-16
WARNING LAMP-DIRECTION INDICATOR-LH (J128)
RESISTOR-IN-LINE (G101)
360 OHMS
P
GW,0.5D
C0233-18
WARNING LAMP-DIRECTION INDICATOR-RH (J127)
RESISTOR-IN-LINE (G101)
360 OHMS
Q
GP,0.75D
C0230-15
WARNING LAMP-TRAILER (J130)
RESISTOR-IN-LINE (G101)
360 OHMS
R
UY,0.5D
C0230-14
WARNING LAMP-FOG GUARD-REAR (J150)
RESISTOR-IN-LINE (G101)
360 OHMS
S
UG,0.5D
C0233-17
WARNING LAMP-MAIN BEAM (J126)
RESISTOR-IN-LINE (G101)
360 OHMS
1 AMP
1 AMP
TACHOMETER (J102)
1 AMP
SPEEDOMETER (J101)
1 AMP
U
G,0.75D
C0233-8
RESISTOR-IN-LINE (G101)
1E3 OHMS
LCD-ILLUMINATION (J152)
X
RO,0.5D
C0233-6
PANEL ILLUMINATION (B125)
1.4 WATT
DIODE 3 (G126)
W
B,0.5D
(NO-DIMMER)
PANEL ILLUMINATION 1 (B125)
1.4 WATT
C0233-5
RESISTOR-IN-LINE (G101)
1E3 OHMS
DIODE 2 (G126)
V
B,0.5D
(DIMMER)
PANEL ILLUMINATION 2 (B125)
1.4 WATT
X
C0233-2
SY,0.5D
C0223-10 C0047-10
SY,0.75D
C0096-8
SWITCH-HAZARD WARNING (S121)
SWITCH PACK-AIR CONDITIONING (A/C) (S194)
C0010-6 C0906-6
SK,0.5
C0275-4
SK,0.5
C0015-3 C0431-3
C0233-13
SK,0.5D
C0223-2 C0047-2
SK,0.5D
SENSOR-PRESSURE-AIR CONDITIONING (T283)
(Td4/NAS)
C0230-10
PB,0.5D
C0229-1 C0067-1
PB,0.5D
C1257-1
(Td4/NAS)
C0230-8
UO,0.5D
C0229-2 C0067-2
UO,0.5D
C1257-3
(Td4/NAS)
C0230-9
UG,0.5D
C0229-3 C0067-3
UG,0.5D
C1257-2
SENSOR-EVAPORATOR (T165)
(Td4/NAS)
C0230-20
GO,0.5D
C0229-5 C0067-5
GO,0.5D
C0417-1
UNIT-FUEL TANK (D179)
C0114-2
C0114-1
B,3.0
C1412-1
GB,0.5D
C0230-21
GB,0.5D
C0223-3 C0047-3
ECU-ENGINE IMMOBILISATION (D139)
C0230-4
WB,0.5D
C0059-5
C0230-24
B,0.75D
A29
B,0.75D
C0233-7
B,0.75D
B,1.5D
C0067-16 C0229-16
HEADER 0294 (K109)
C0294-7
C0294-5
B,1.5D
HEADER-EARTH 0550 (K108)
C0550-3
VWR004210-B-03

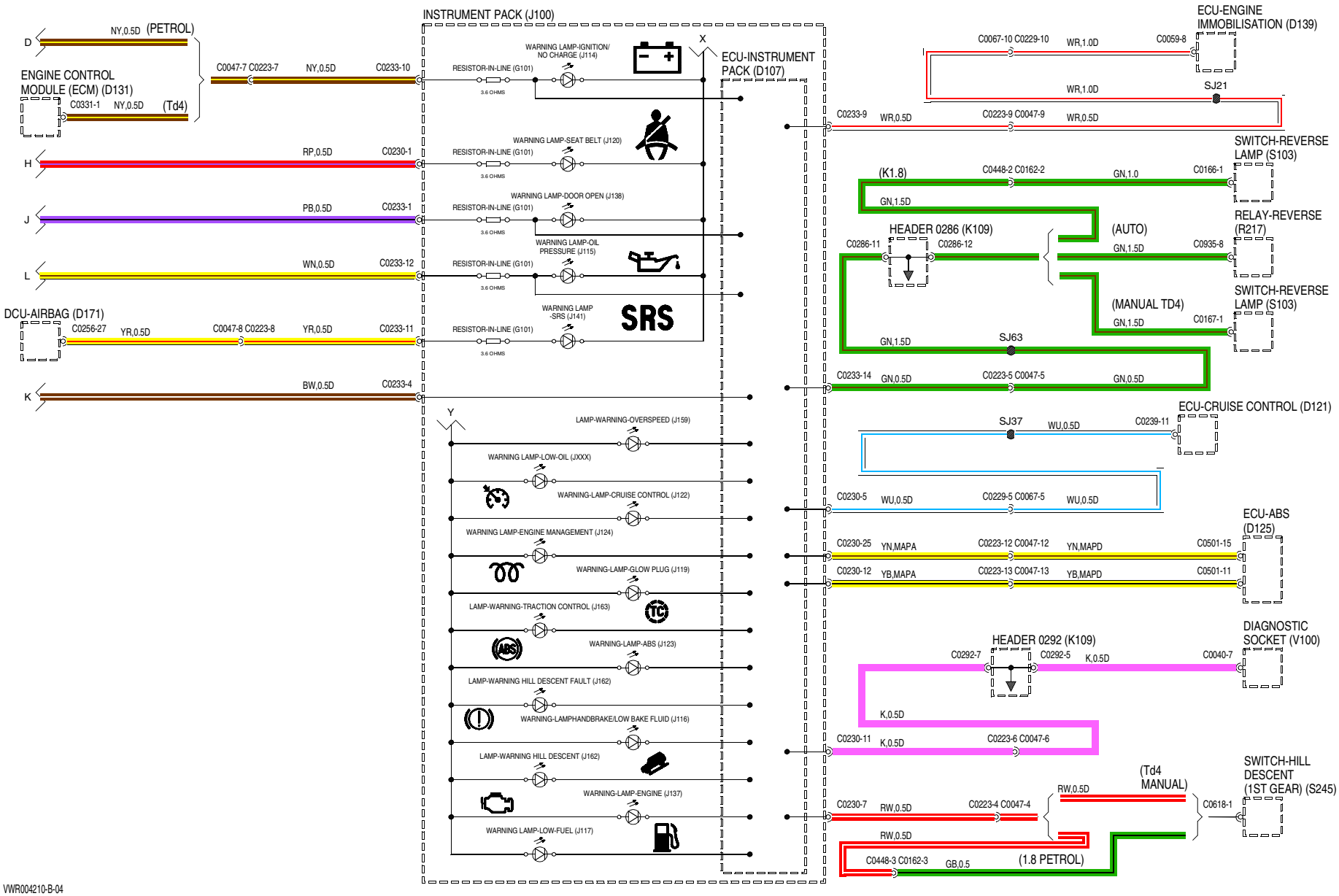
INSTRUMENT PACK (J100)
ECU-INSTRUMENT PACK (D107)
ENGINE CONTROL MODULE (ECM) (D131)
(PETROL)
(Td4)
DCU-AIRBAG (D171)
ECU-ENGINE IMMOBILISATION (D139)
SJ21
SWITCH-REVERSE LAMP (S103)
(K1.8)
HEADER 0286 (K109)
(AUTO)
(MANUAL TD4)
RELAY-REVERSE (R217)
SJ63
ECU-CRUISE CONTROL (D121)
SJ37
ECU-ABS (D125)
HEADER 0292 (K109)
DIAGNOSTIC SOCKET (V100)
SWITCH-HILL DESCENT (1ST GEAR) (S245)
(Td4 MANUAL)
(1.8 PETROL)
WARNING LAMP-IGNITION/ NO CHARGE (J114)
WARNING LAMP-SEAT BELT (J120)
WARNING LAMP-DOOR OPEN (J138)
WARNING LAMP-OIL PRESSURE (J115)
WARNING LAMP -SRS (J141)
SRS
RESISTOR-IN-LINE (G101)
3.6 OHMS
LAMP-WARNING-OVERSPEED (J159)
WARNING LAMP-LOW-OIL (JXXX)
WARNING-LAMP-CRUISE CONTROL (J122)
WARNING LAMP-ENGINE MANAGEMENT (J124)
WARNING-LAMP-GLOW PLUG (J119)
LAMP-WARNING-TRACTION CONTROL (J163)
WARNING-LAMP-ABS (J123)
LAMP-WARNING HILL DESCENT FAULT (J162)
WARNING-LAMPHANDBRAKE/LOW BAKE FLUID (J116)
LAMP-WARNING HILL DESCENT (J162)
WARNING-LAMP-ENGINE (J137)
WARNING LAMP-LOW-FUEL (J117)
VWR004210-B-04

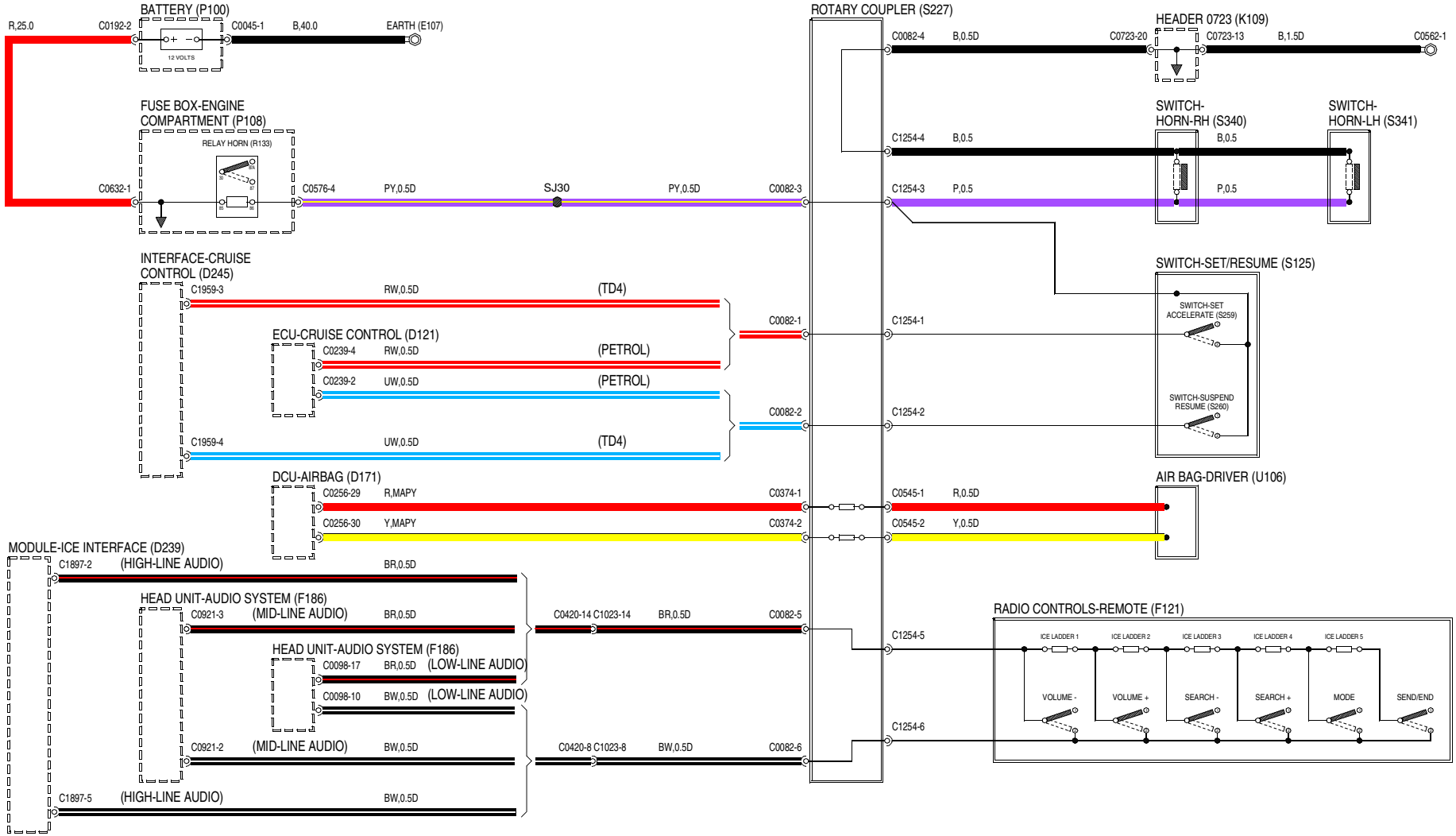

VWR004270-A-01

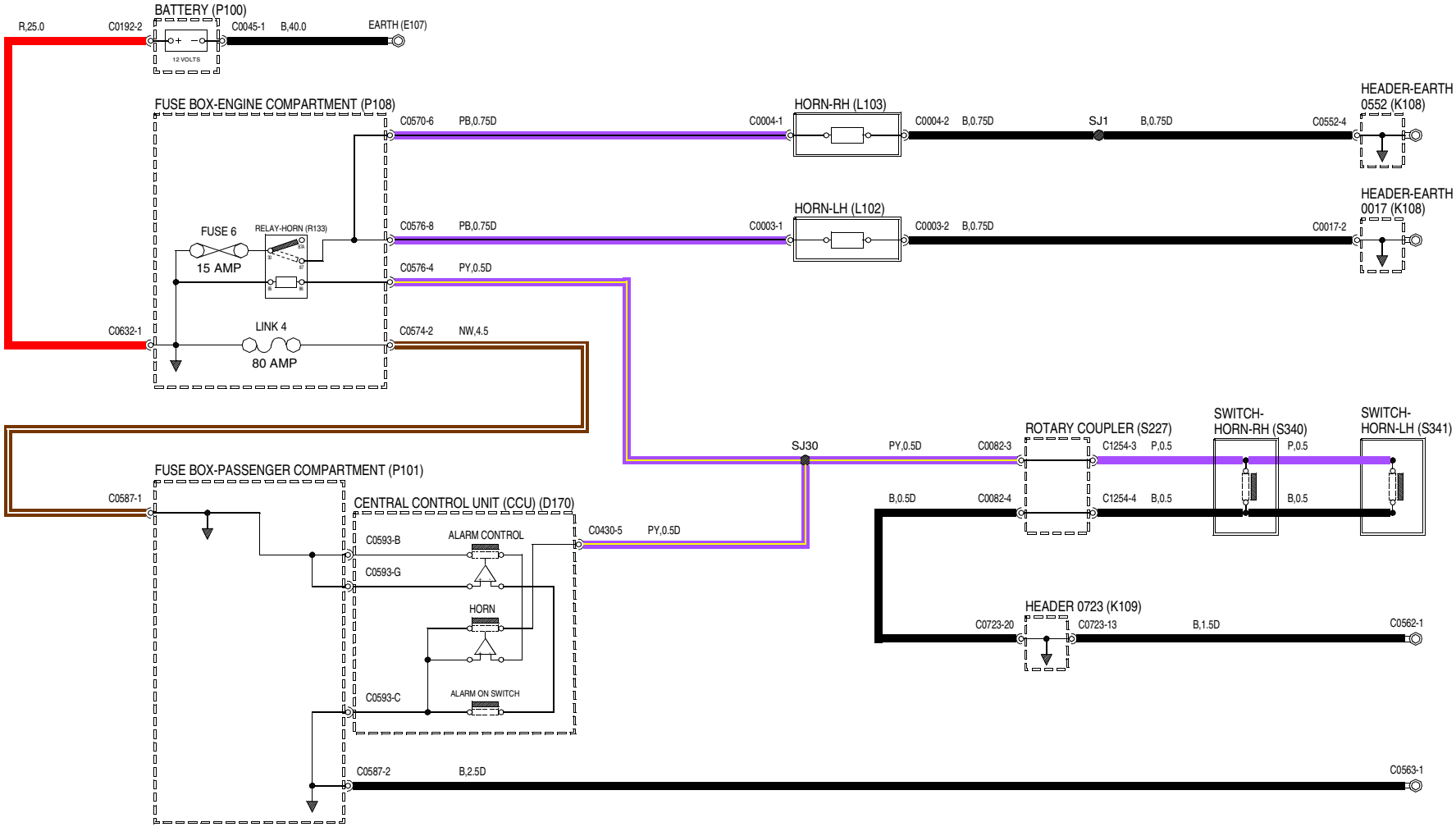

VWR004170-A-01

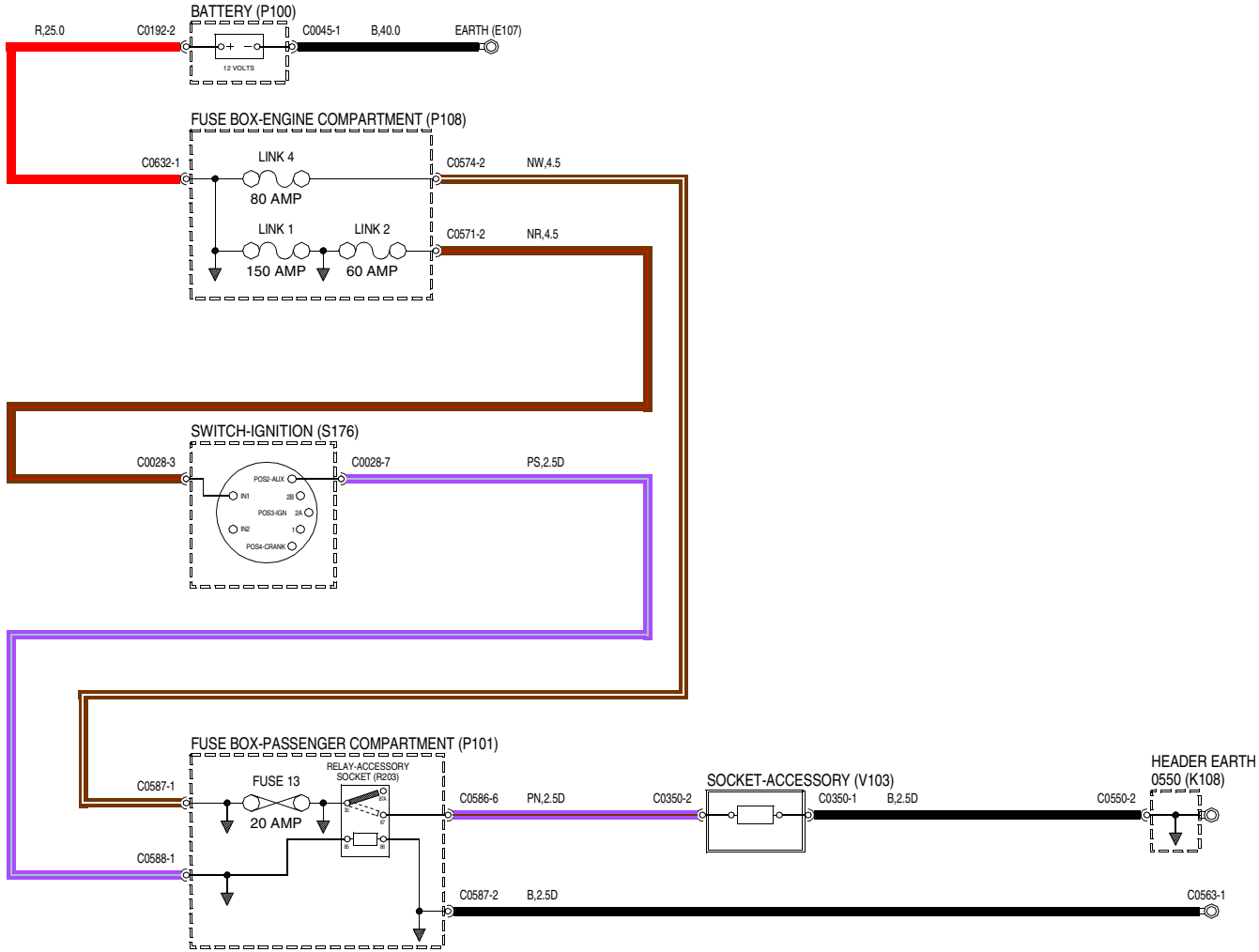

VWR003940-A-01

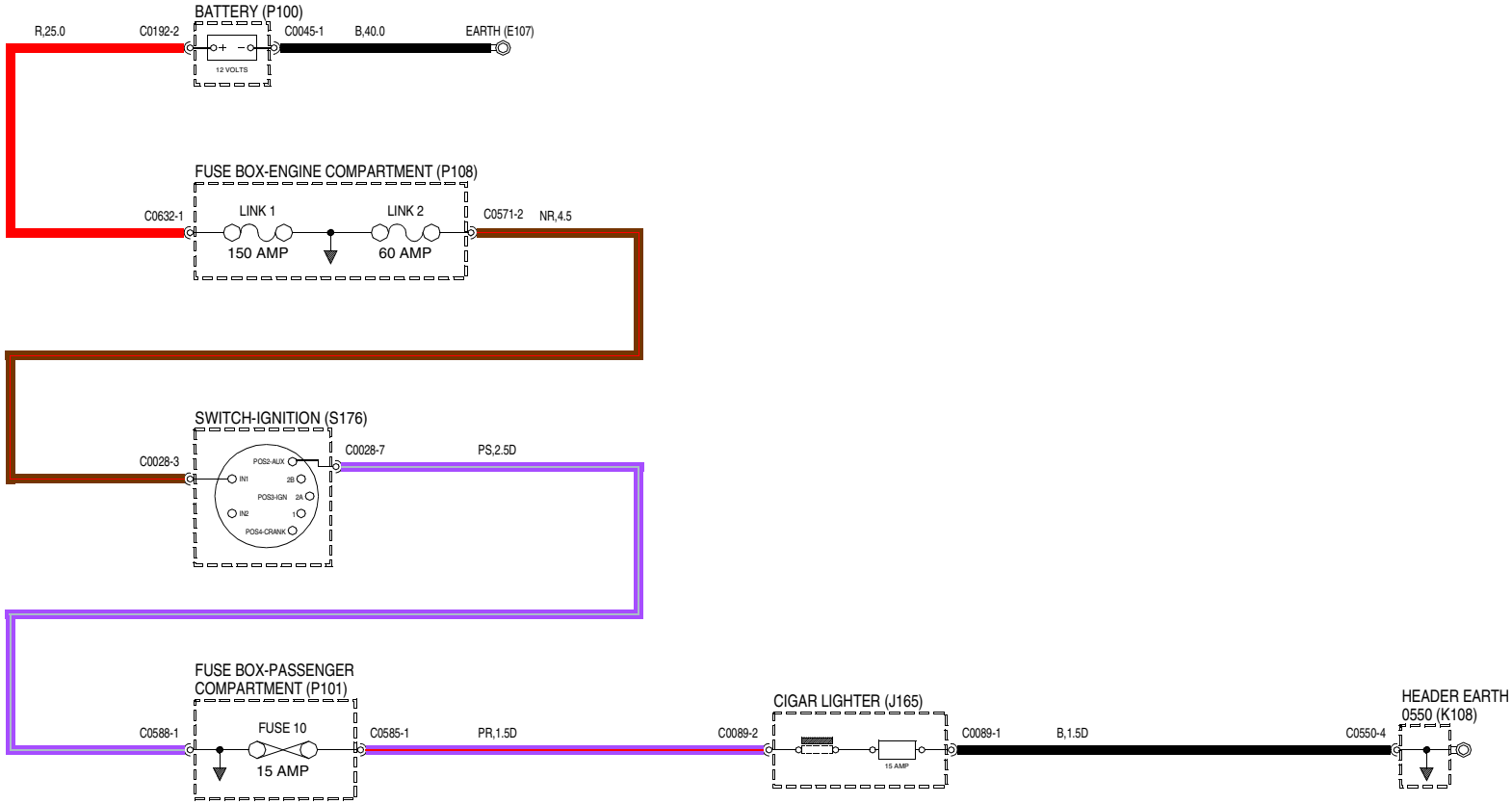

VWR004000-A-01

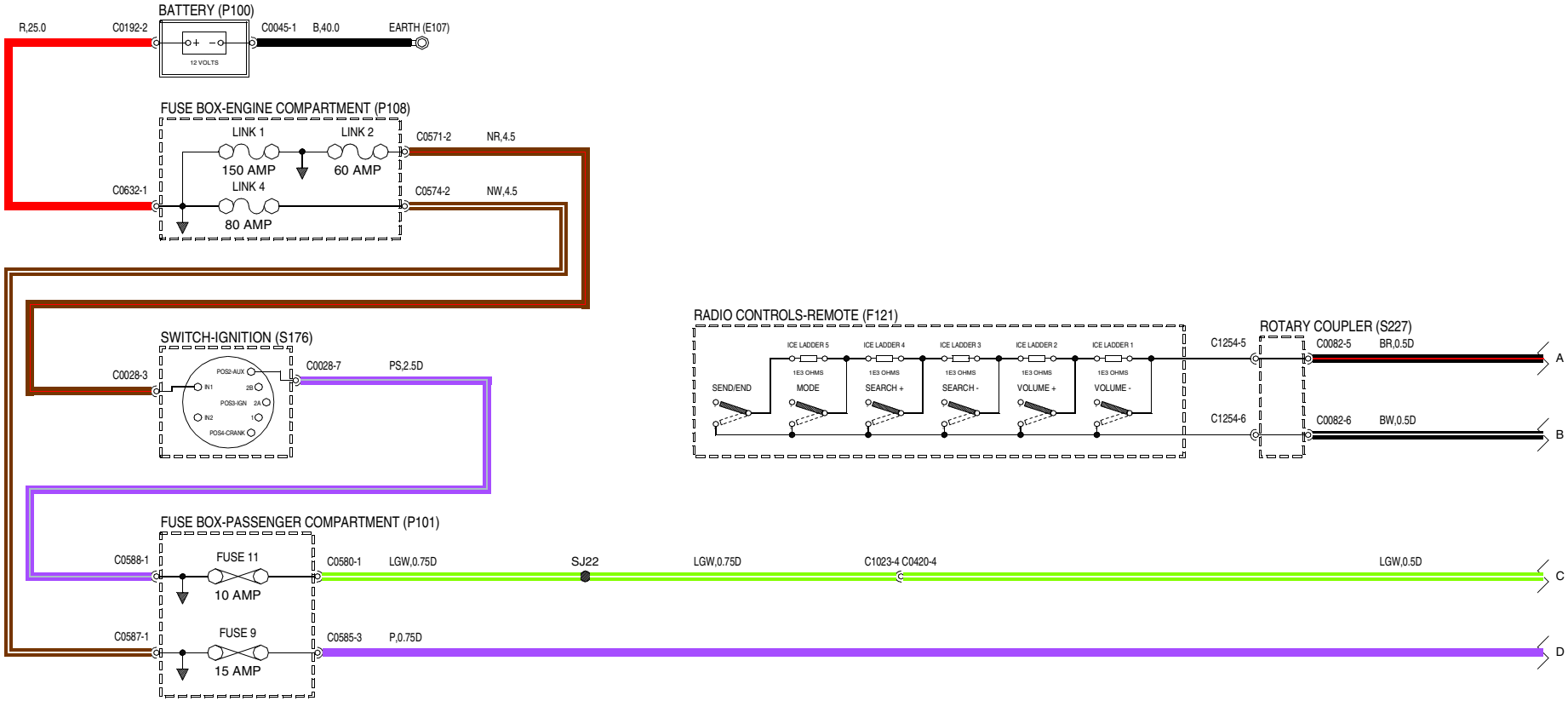

VWR004180-A-01

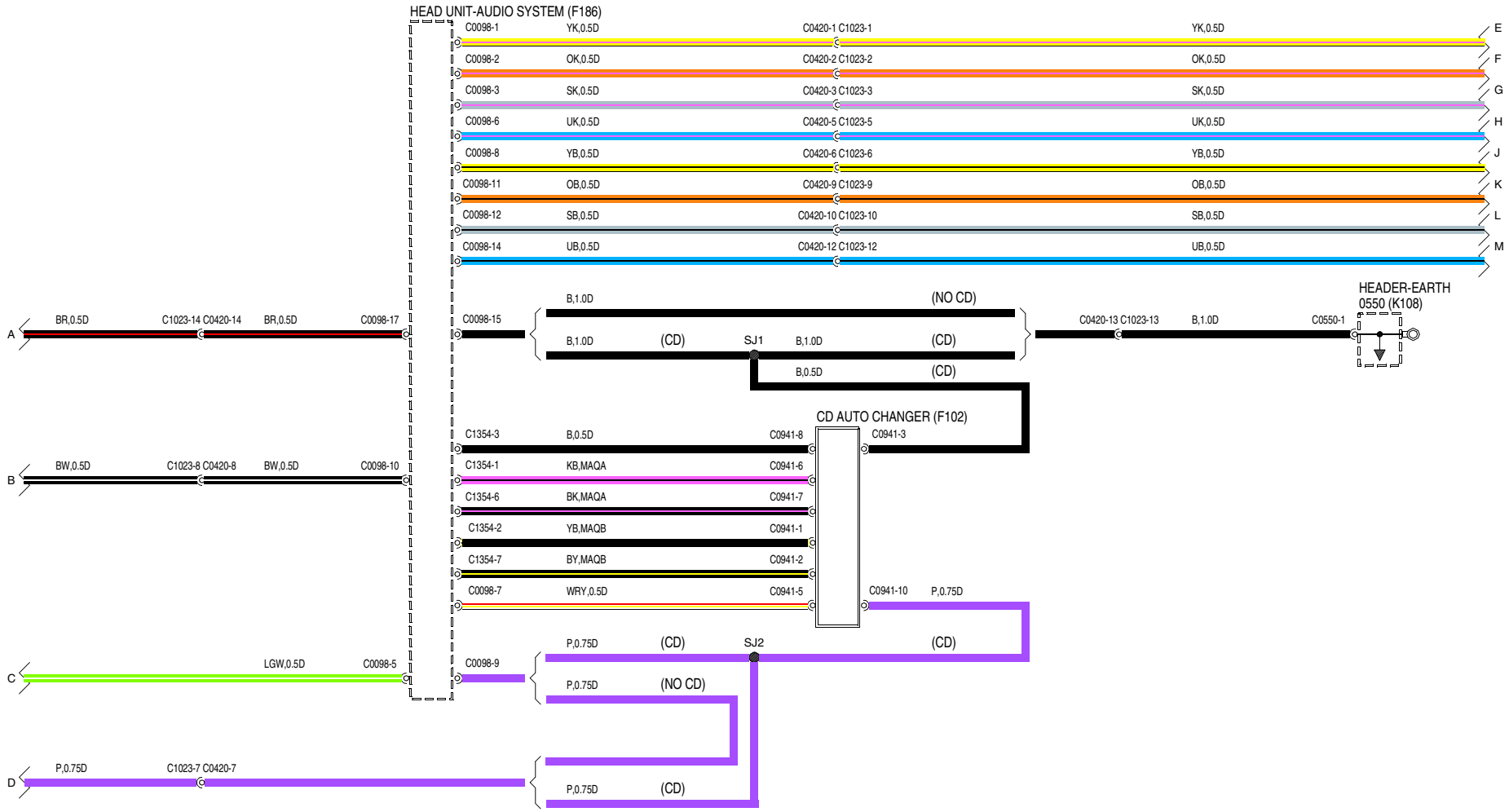
HEAD UNIT-AUDIO SYSTEM (F186)
C0098-1 YK,0.5D C0420-1 C1023-1 YK,0.5D E
C0098-2 OK,0.5D C0420-2 C1023-2 OK,0.5D F
C0098-3 SK,0.5D C0420-3 C1023-3 SK,0.5D G
C0098-6 UK,0.5D C0420-5 C1023-5 UK,0.5D H
C0098-8 YB,0.5D C0420-6 C1023-6 YB,0.5D J
C0098-11 OB,0.5D C0420-9 C1023-9 OB,0.5D K
C0098-12 SB,0.5D C0420-10 C1023-10 SB,0.5D L
C0098-14 UB,0.5D C0420-12 C1023-12 UB,0.5D M
A BR,0.5D C1023-14 C0420-14 BR,0.5D C0098-17
C0098-15
B,1.0D (NO CD)
B,1.0D (CD) SJ1 B,1.0D (CD)
B,0.5D (CD)
C0420-13 C1023-13 B,1.0D C0550-1
HEADER-EARTH
0550 (K108)
CD AUTO CHANGER (F102)
C1354-3 B,0.5D C0941-8 C0941-3
B BW,0.5D C1023-8 C0420-8 BW,0.5D C0098-10
C1354-1 KB,MAQA C0941-6
C1354-6 BK,MAQA C0941-7
C1354-2 YB,MAQB C0941-1
C1354-7 BY,MAQB C0941-2
C0098-7 WRY,0.5D C0941-5 C0941-10 P,0.75D
P,0.75D (CD) SJ2 (CD)
C LGW,0.5D C0098-5 C0098-9
P,0.75D (NO CD)
D P,0.75D C1023-7 C0420-7
P,0.75D (CD)
VWR004180-A-02

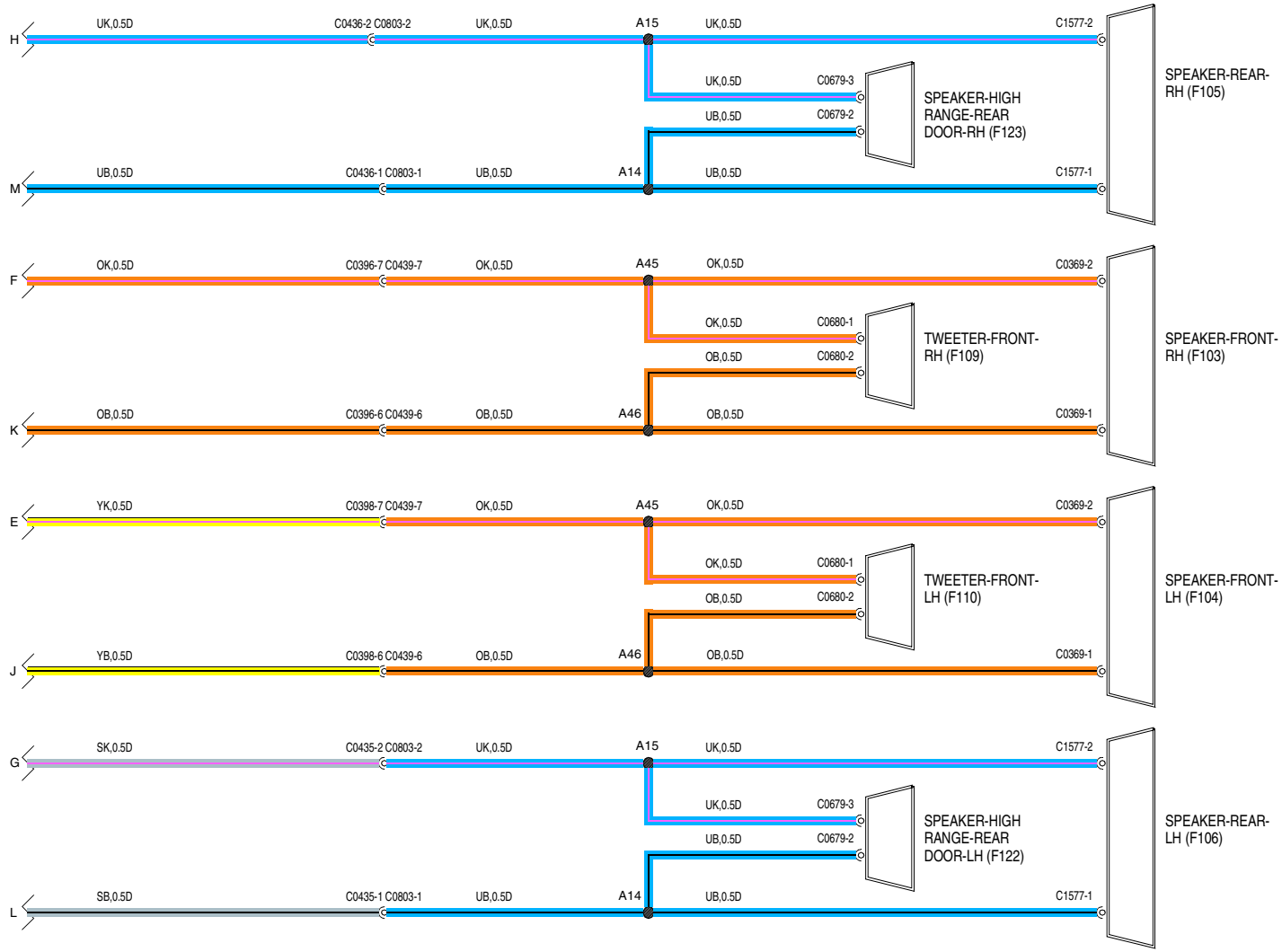
H
UK,0.5D
C0436-2 C0803-2
UK,0.5D
A15
UK,0.5D
C1577-2
UK,0.5D
C0679-3
UB,0.5D
C0679-2
SPEAKER-HIGH RANGE-REAR DOOR-RH (F123)
SPEAKER-REAR-RH (F105)
M
UB,0.5D
C0436-1 C0803-1
UB,0.5D
A14
UB,0.5D
C1577-1
F
OK,0.5D
C0396-7 C0439-7
OK,0.5D
A45
OK,0.5D
C0369-2
OK,0.5D
C0680-1
OB,0.5D
C0680-2
TWEETER-FRONT-RH (F109)
SPEAKER-FRONT-RH (F103)
K
OB,0.5D
C0396-6 C0439-6
OB,0.5D
A46
OB,0.5D
C0369-1
E
YK,0.5D
C0398-7 C0439-7
OK,0.5D
A45
OK,0.5D
C0369-2
OK,0.5D
C0680-1
OB,0.5D
C0680-2
TWEETER-FRONT-LH (F110)
SPEAKER-FRONT-LH (F104)
J
YB,0.5D
C0398-6 C0439-6
OB,0.5D
A46
OB,0.5D
C0369-1
G
SK,0.5D
C0435-2 C0803-2
UK,0.5D
A15
UK,0.5D
C1577-2
UK,0.5D
C0679-3
UB,0.5D
C0679-2
SPEAKER-HIGH RANGE-REAR DOOR-LH (F122)
SPEAKER-REAR-LH (F106)
L
SB,0.5D
C0435-1 C0803-1
UB,0.5D
A14
UB,0.5D
C1577-1
VWR004180-A-03

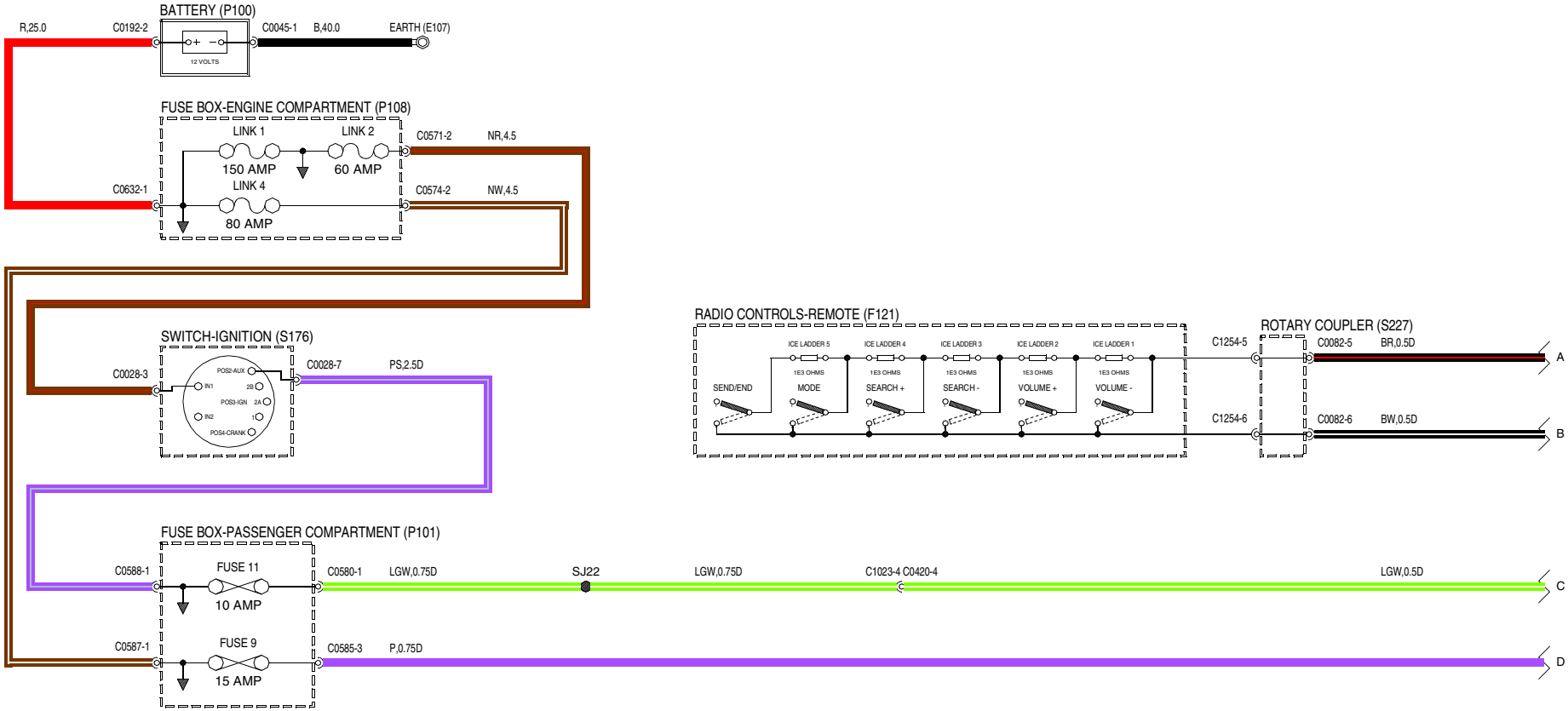

VWR004420-A-01

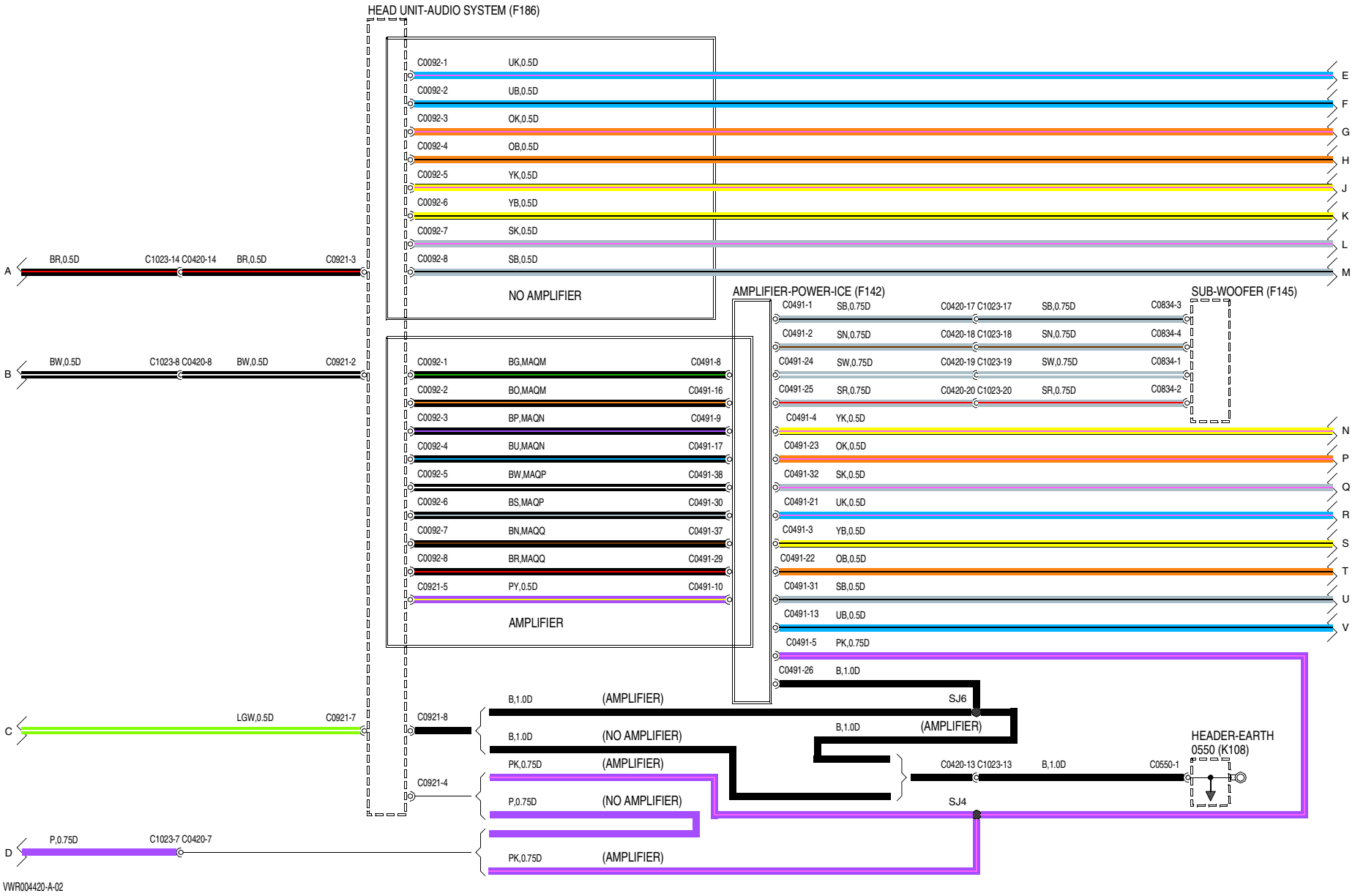
HEAD UNIT-AUDIO SYSTEM (F186)
C0092-1 UK,0.5D
C0092-2 UB,0.5D
C0092-3 OK,0.5D
C0092-4 OB,0.5D
C0092-5 YK,0.5D
C0092-6 YB,0.5D
C0092-7 SK,0.5D
C0092-8 SB,0.5D
NO AMPLIFIER
A BR,0.5D C1023-14 C0420-14 BR,0.5D C0921-3
B BW,0.5D C1023-8 C0420-8 BW,0.5D C0921-2
C0092-1 BG,MAQM C0491-8
C0092-2 BO,MAQM C0491-16
C0092-3 BP,MAQN C0491-9
C0092-4 BU,MAQN C0491-17
C0092-5 BW,MAQP C0491-38
C0092-6 BS,MAQP C0491-30
C0092-7 BN,MAQQ C0491-37
C0092-8 BR,MAQQ C0491-29
C0921-5 PY,0.5D C0491-10
AMPLIFIER
AMPLIFIER-POWER-ICE (F142)
C0491-1 SB,0.75D C0420-17 C1023-17 SB,0.75D C0834-3
C0491-2 SN,0.75D C0420-18 C1023-18 SN,0.75D C0834-4
C0491-24 SW,0.75D C0420-19 C1023-19 SW,0.75D C0834-1
C0491-25 SR,0.75D C0420-20 C1023-20 SR,0.75D C0834-2
SUB-WOOFER (F145)
C0491-4 YK,0.5D
C0491-23 OK,0.5D
C0491-32 SK,0.5D
C0491-21 UK,0.5D
C0491-3 YB,0.5D
C0491-22 OB,0.5D
C0491-31 SB,0.5D
C0491-13 UB,0.5D
C0491-5 PK,0.75D
C0491-26 B,1.0D
E F G H J K L M N P Q R S T U V
C LGW,0.5D C0921-7
C0921-8
B,1.0D (AMPLIFIER)
B,1.0D (NO AMPLIFIER)
SJ6
B,1.0D (AMPLIFIER)
HEADER-EARTH
0550 (K108)
PK,0.75D (AMPLIFIER)
C0921-4
P,0.75D (NO AMPLIFIER)
C0420-13 C1023-13 B,1.0D C0550-1
SJ4
D P,0.75D C1023-7 C0420-7
PK,0.75D (AMPLIFIER)
VWR004420-A-02

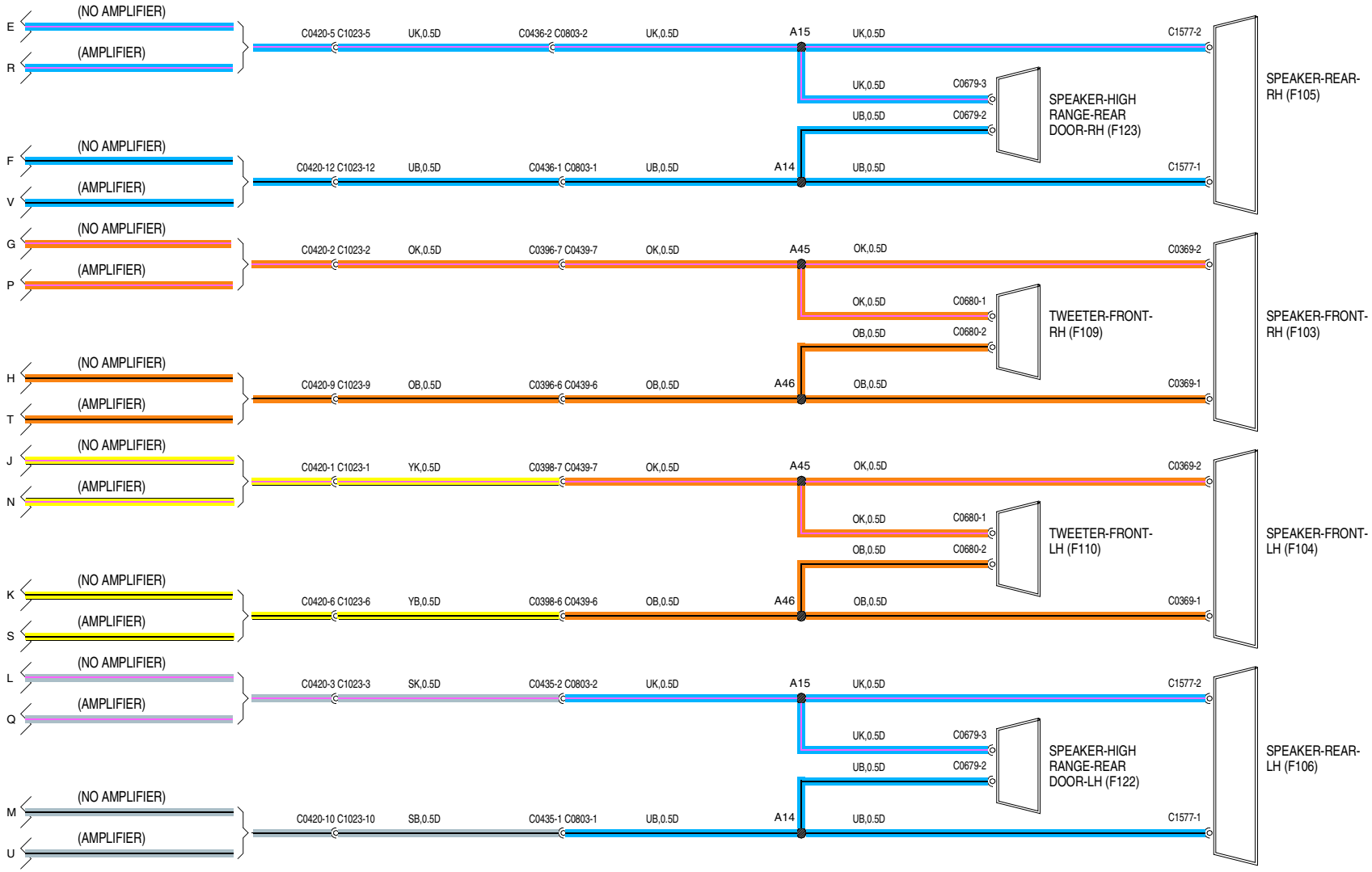

VWR004420-A-03

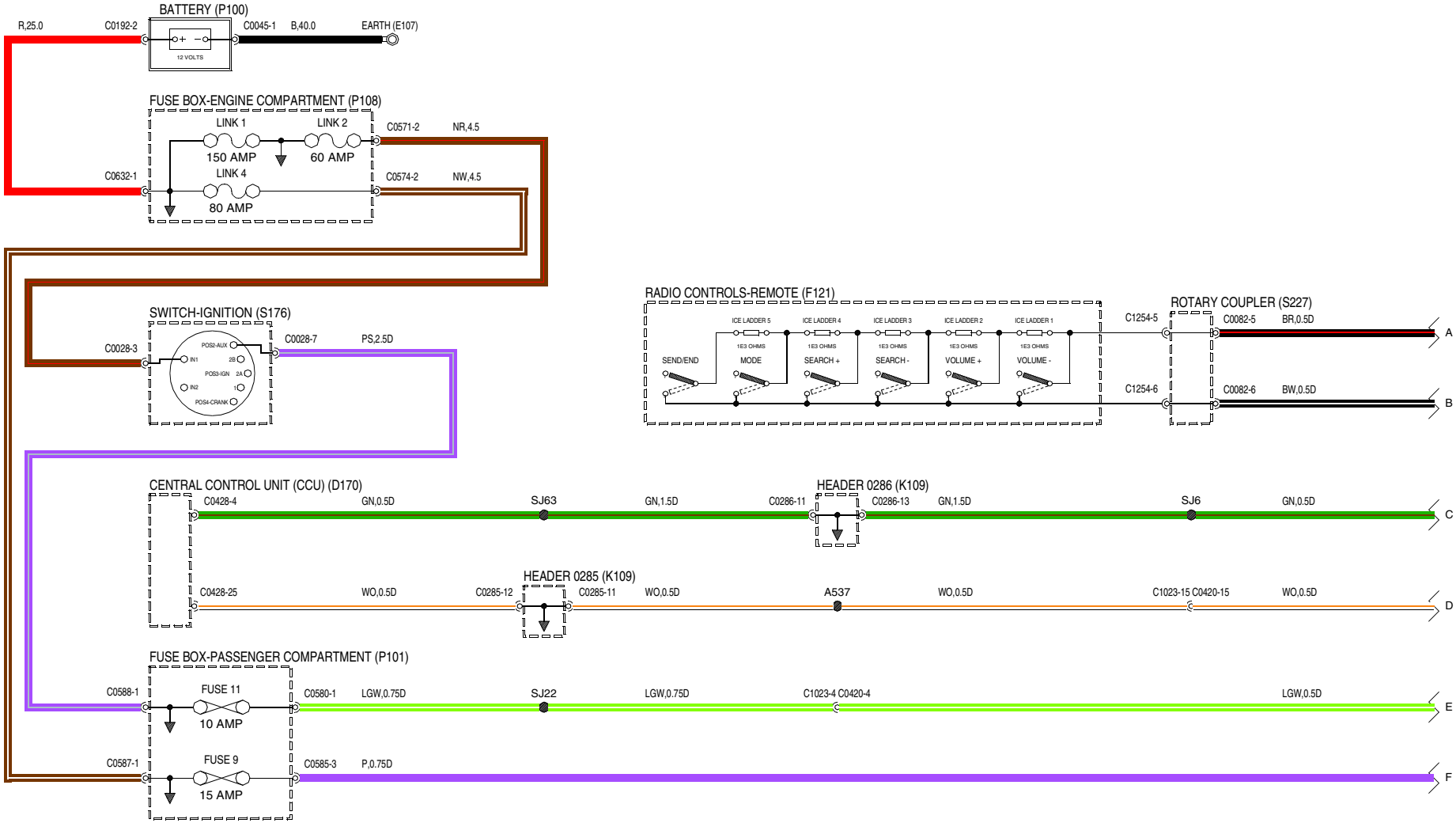

VWR004610-A-01

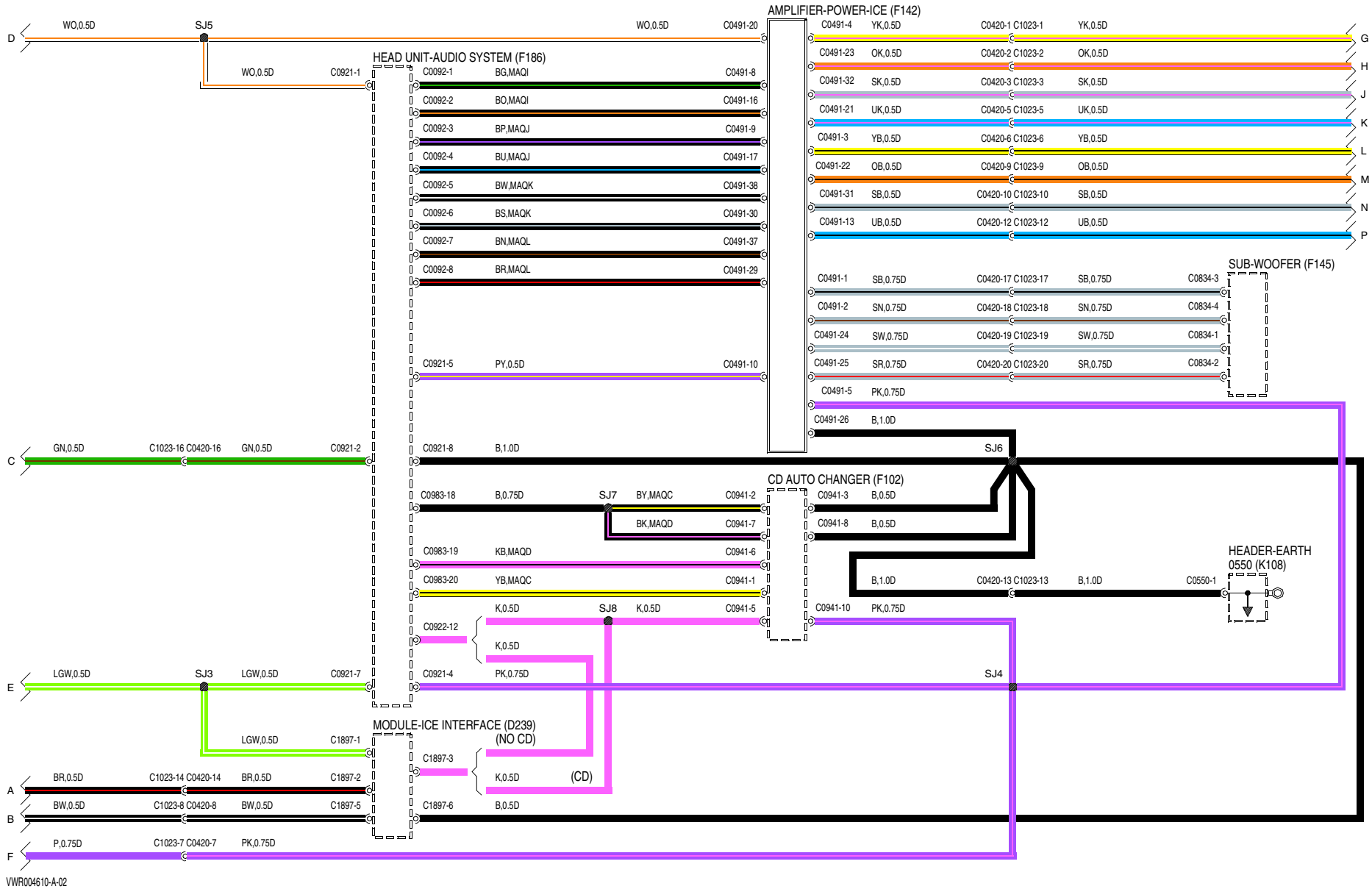
AMPLIFIER-POWER-ICE (F142)
HEAD UNIT-AUDIO SYSTEM (F186)
SUB-WOOFER (F145)
CD AUTO CHANGER (F102)
HEADER-EARTH 0550 (K108)
MODULE-ICE INTERFACE (D239)
(NO CD)
(CD)
SJ5
SJ6
SJ7
SJ8
SJ3
SJ4
WO,0.5D C0491-20
WO,0.5D C0921-1
C0092-1 BG,MAQI C0491-8
C0092-2 BO,MAQI C0491-16
C0092-3 BP,MAQJ C0491-9
C0092-4 BU,MAQJ C0491-17
C0092-5 BW,MAQK C0491-38
C0092-6 BS,MAQK C0491-30
C0092-7 BN,MAQL C0491-37
C0092-8 BR,MAQL C0491-29
C0921-5 PY,0.5D C0491-10
C0491-4 YK,0.5D C0420-1 C1023-1 YK,0.5D
C0491-23 OK,0.5D C0420-2 C1023-2 OK,0.5D
C0491-32 SK,0.5D C0420-3 C1023-3 SK,0.5D
C0491-21 UK,0.5D C0420-5 C1023-5 UK,0.5D
C0491-3 YB,0.5D C0420-6 C1023-6 YB,0.5D
C0491-22 OB,0.5D C0420-9 C1023-9 OB,0.5D
C0491-31 SB,0.5D C0420-10 C1023-10 SB,0.5D
C0491-13 UB,0.5D C0420-12 C1023-12 UB,0.5D
C0491-1 SB,0.75D C0420-17 C1023-17 SB,0.75D C0834-3
C0491-2 SN,0.75D C0420-18 C1023-18 SN,0.75D C0834-4
C0491-24 SW,0.75D C0420-19 C1023-19 SW,0.75D C0834-1
C0491-25 SR,0.75D C0420-20 C1023-20 SR,0.75D C0834-2
C0491-5 PK,0.75D
C0491-26 B,1.0D
GN,0.5D C1023-16 C0420-16 GN,0.5D C0921-2
C0921-8 B,1.0D
C0983-18 B,0.75D
BY,MAQC C0941-2
BK,MAQD C0941-7
C0983-19 KB,MAQD C0941-6
C0983-20 YB,MAQC C0941-1
K,0.5D K,0.5D C0941-5
C0941-3 B,0.5D
C0941-8 B,0.5D
B,1.0D C0420-13 C1023-13 B,1.0D C0550-1
C0941-10 PK,0.75D
C0922-12
K,0.5D
LGW,0.5D SJ3 LGW,0.5D C0921-7
C0921-4 PK,0.75D
LGW,0.5D C1897-1
C1897-3
BR,0.5D C1023-14 C0420-14 BR,0.5D C1897-2
K,0.5D
BW,0.5D C1023-8 C0420-8 BW,0.5D C1897-5
C1897-6 B,0.5D
P,0.75D C1023-7 C0420-7 PK,0.75D
D
C
E
A
B
F
G
H
J
K
L
M
N
P
VWR004610-A-02

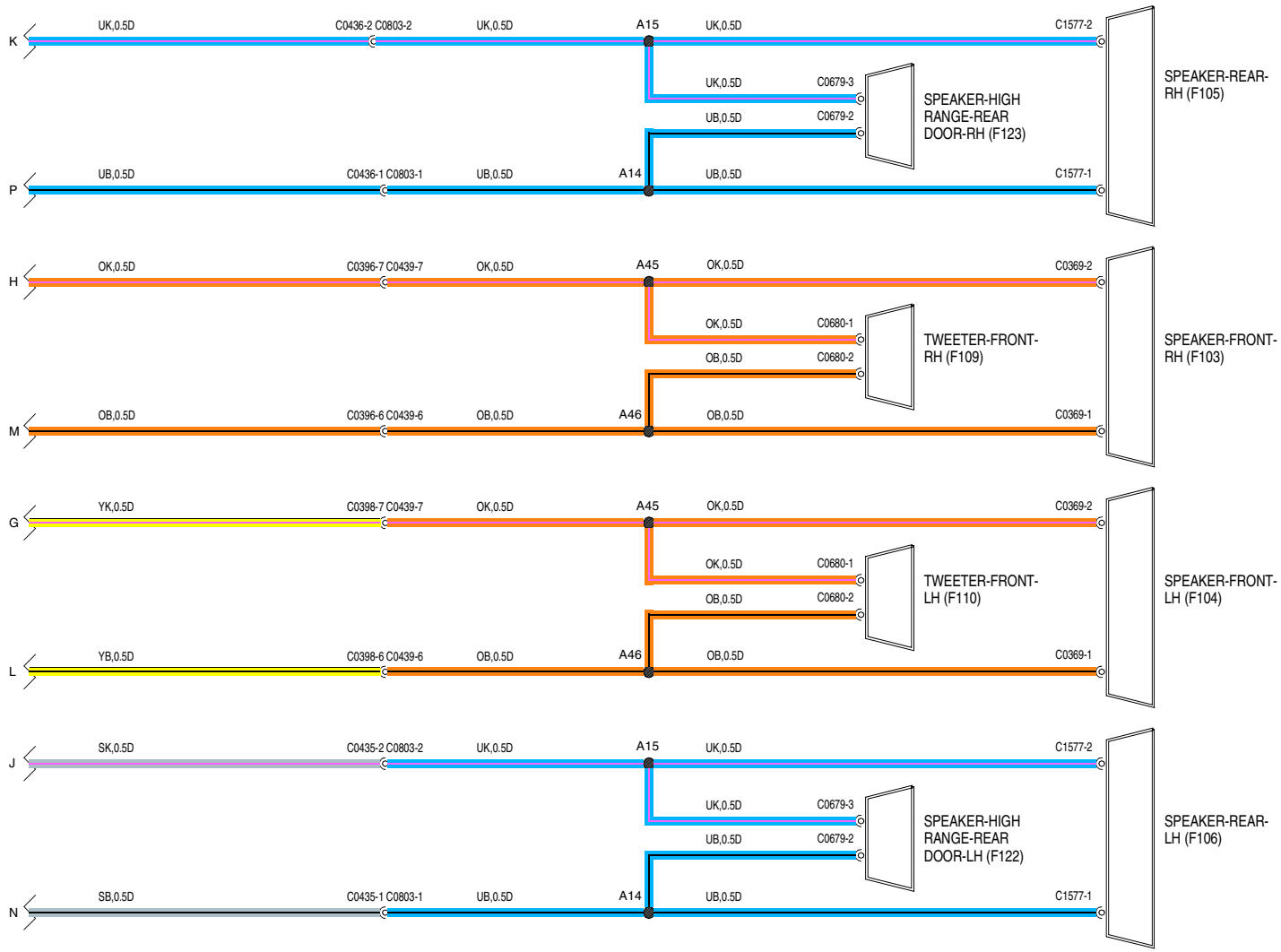

VWR004610-A-03

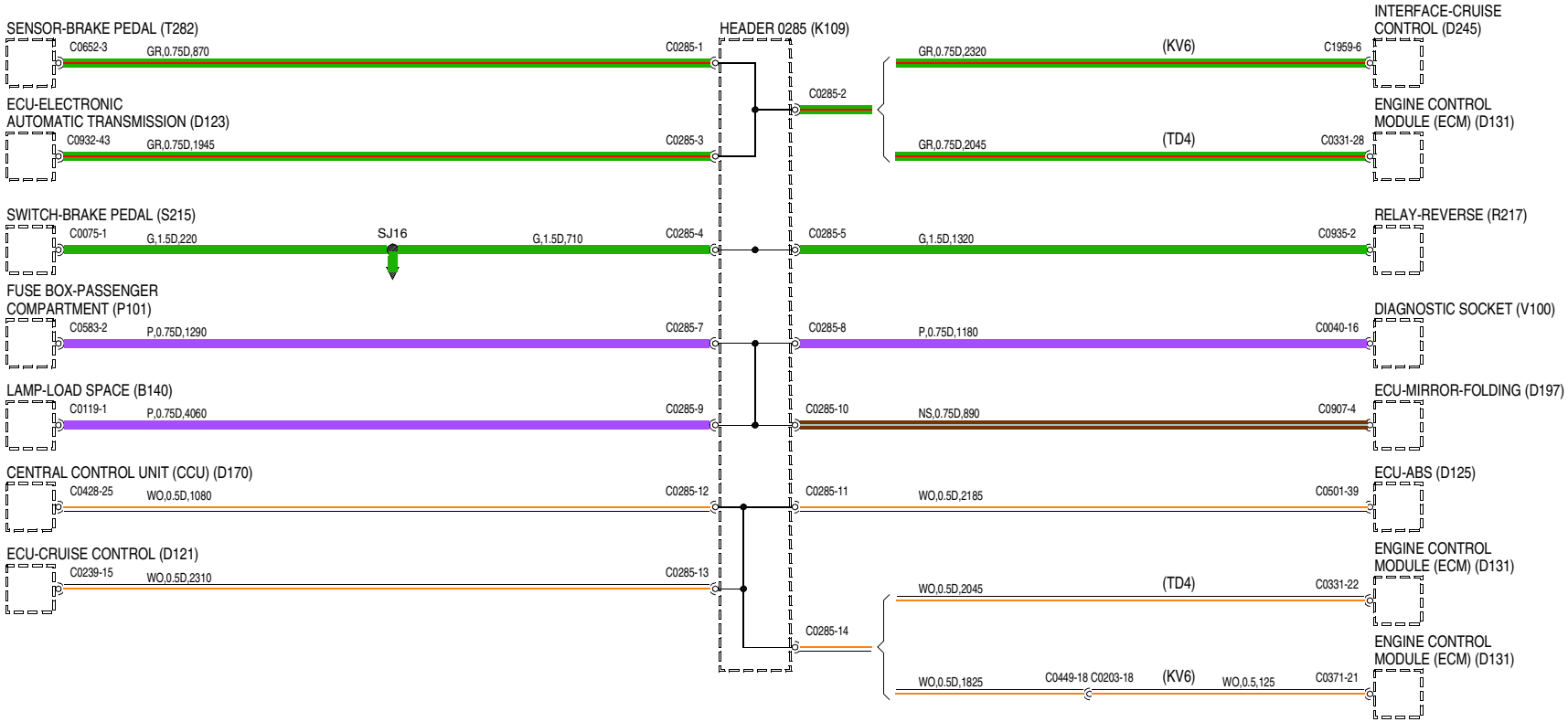

VWR004140-A-01

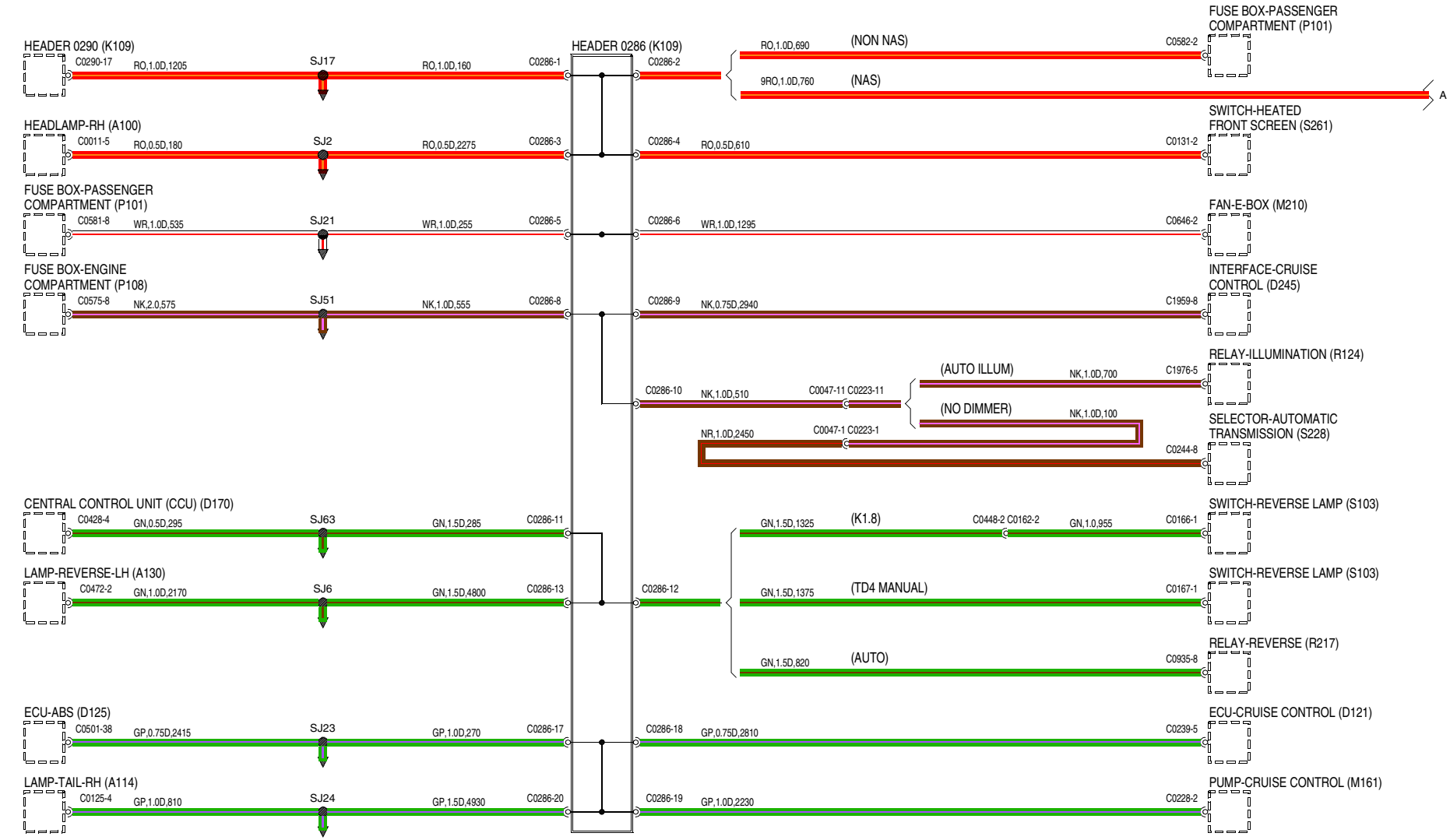
HEADER 0290 (K109)
C0290-17
RO,1.0D,1205
SJ17
RO,1.0D,160
C0286-1
HEADER 0286 (K109)
C0286-2
RO,1.0D,690
(NON NAS)
C0582-2
FUSE BOX-PASSENGER COMPARTMENT (P101)
9RO,1.0D,760
(NAS)
A
HEADLAMP-RH (A100)
C0011-5
RO,0.5D,180
SJ2
RO,0.5D,2275
C0286-3
C0286-4
RO,0.5D,610
C0131-2
SWITCH-HEATED FRONT SCREEN (S261)
FUSE BOX-PASSENGER COMPARTMENT (P101)
C0581-8
WR,1.0D,535
SJ21
WR,1.0D,255
C0286-5
C0286-6
WR,1.0D,1295
C0646-2
FAN-E-BOX (M210)
FUSE BOX-ENGINE COMPARTMENT (P108)
C0575-8
NK,2.0,575
SJ51
NK,1.0D,555
C0286-8
C0286-9
NK,0.75D,2940
C1959-8
INTERFACE-CRUISE CONTROL (D245)
RELAY-ILLUMINATION (R124)
(AUTO ILLUM)
NK,1.0D,700
C1976-5
C0286-10
NK,1.0D,510
C0047-11 C0223-11
(NO DIMMER)
NK,1.0D,100
NR,1.0D,2450
C0047-1 C0223-1
C0244-8
SELECTOR-AUTOMATIC TRANSMISSION (S228)
CENTRAL CONTROL UNIT (CCU) (D170)
C0428-4
GN,0.5D,295
SJ63
GN,1.5D,285
C0286-11
GN,1.5D,1325
(K1.8)
C0448-2 C0162-2
GN,1.0,955
C0166-1
SWITCH-REVERSE LAMP (S103)
LAMP-REVERSE-LH (A130)
C0472-2
GN,1.0D,2170
SJ6
GN,1.5D,4800
C0286-13
C0286-12
GN,1.5D,1375
(TD4 MANUAL)
C0167-1
SWITCH-REVERSE LAMP (S103)
GN,1.5D,820
(AUTO)
C0935-8
RELAY-REVERSE (R217)
ECU-ABS (D125)
C0501-38
GP,0.75D,2415
SJ23
GP,1.0D,270
C0286-17
C0286-18
GP,0.75D,2810
C0239-5
ECU-CRUISE CONTROL (D121)
LAMP-TAIL-RH (A114)
C0125-4
GP,1.0D,810
SJ24
GP,1.5D,4930
C0286-20
C0286-19
GP,1.0D,2230
C0228-2
PUMP-CRUISE CONTROL (M161)
VWR004140-A-02

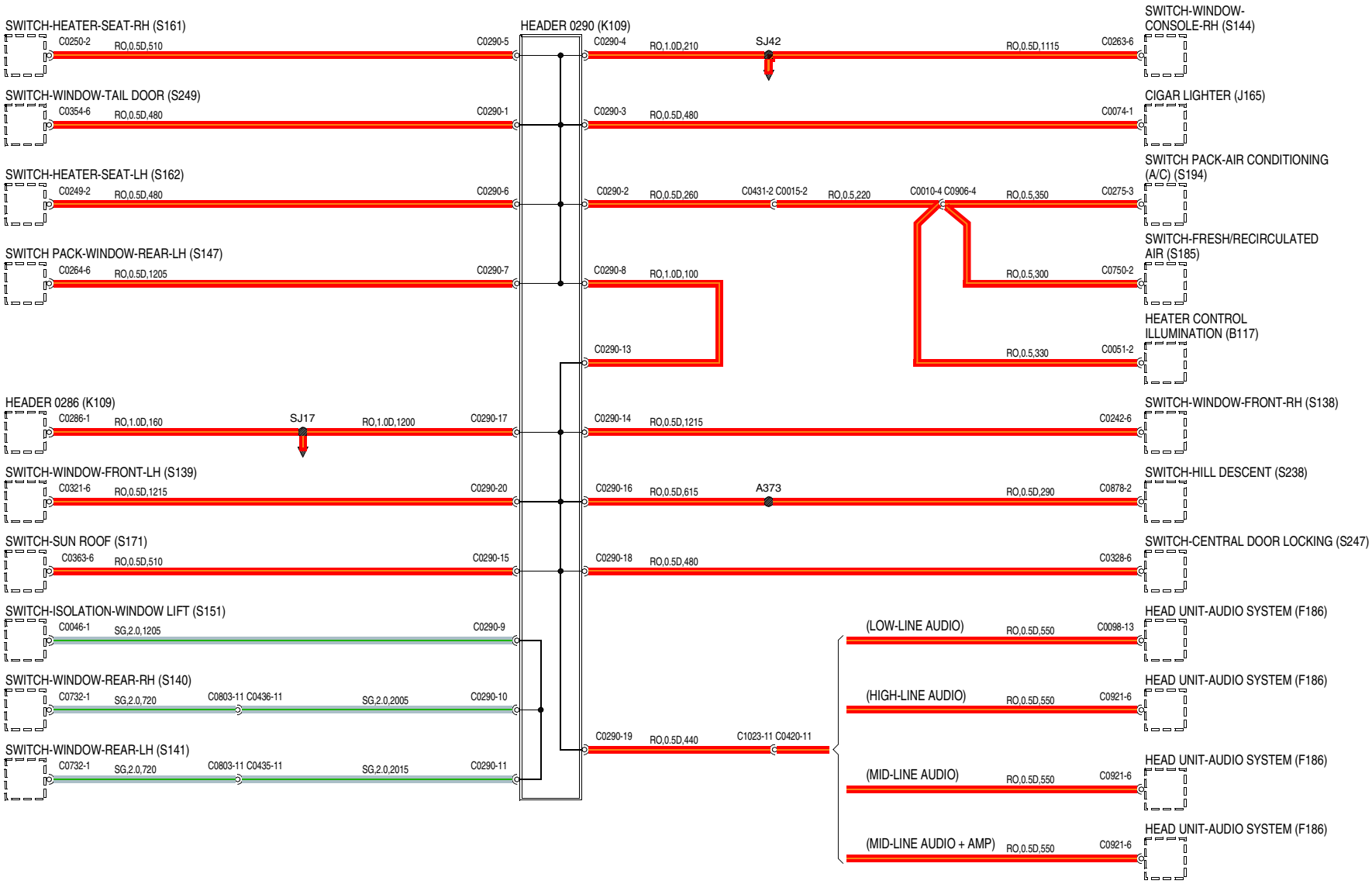

VWR004140-A-03

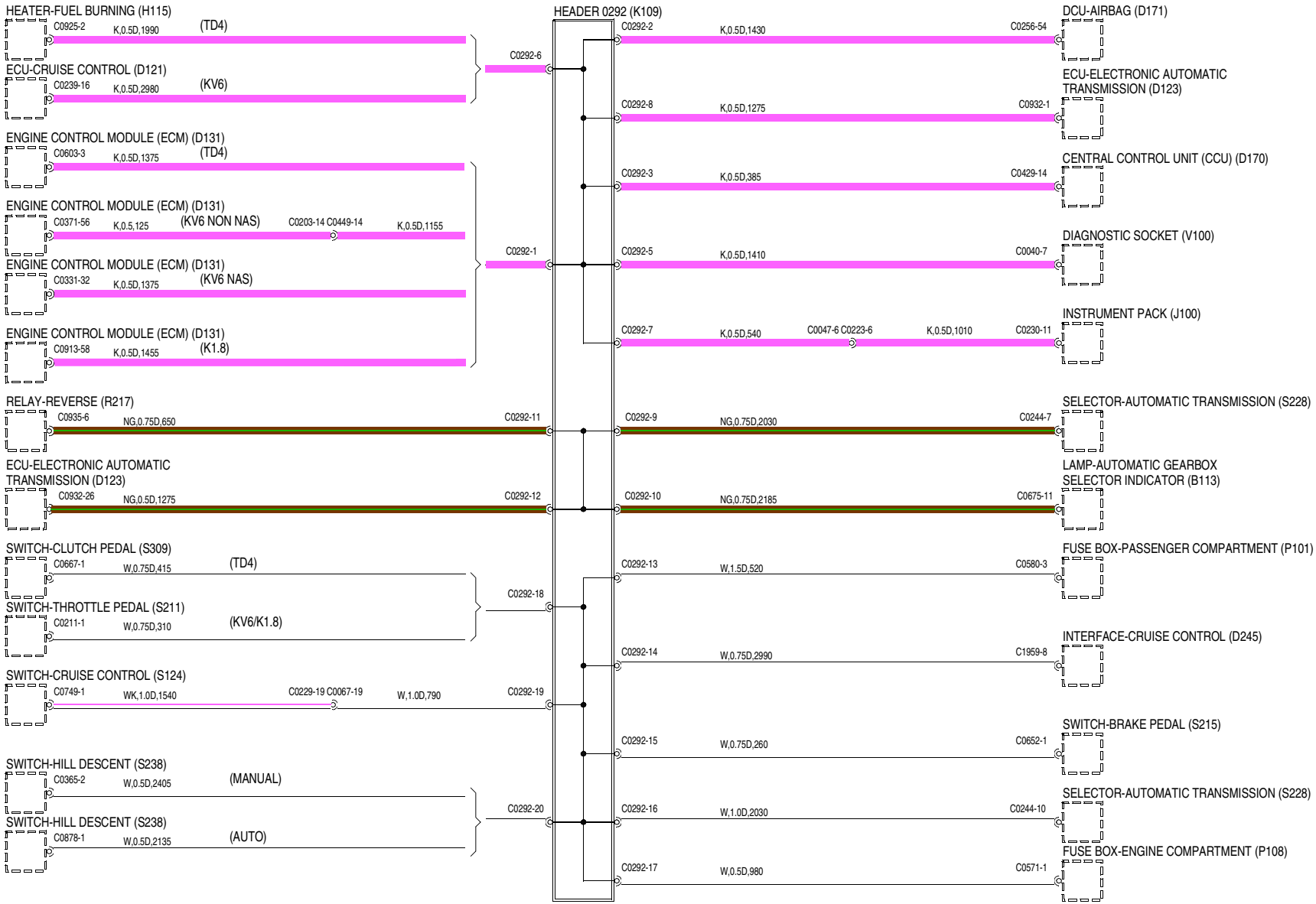
HEATER-FUEL BURNING (H115)
C0925-2
K,0.5D,1990
(TD4)
ECU-CRUISE CONTROL (D121)
C0239-16
K,0.5D,2980
(KV6)
ENGINE CONTROL MODULE (ECM) (D131)
C0603-3
K,0.5D,1375
(TD4)
ENGINE CONTROL MODULE (ECM) (D131)
C0371-56
K,0.5,125
(KV6 NON NAS)
C0203-14 C0449-14
K,0.5D,1155
ENGINE CONTROL MODULE (ECM) (D131)
C0331-32
K,0.5D,1375
(KV6 NAS)
ENGINE CONTROL MODULE (ECM) (D131)
C0913-58
K,0.5D,1455
(K1.8)
RELAY-REVERSE (R217)
C0935-6
NG,0.75D,650
ECU-ELECTRONIC AUTOMATIC TRANSMISSION (D123)
C0932-26
NG,0.5D,1275
SWITCH-CLUTCH PEDAL (S309)
C0667-1
W,0.75D,415
(TD4)
SWITCH-THROTTLE PEDAL (S211)
C0211-1
W,0.75D,310
(KV6/K1.8)
SWITCH-CRUISE CONTROL (S124)
C0749-1
WK,1.0D,1540
C0229-19 C0067-19
W,1.0D,790
SWITCH-HILL DESCENT (S238)
C0365-2
W,0.5D,2405
(MANUAL)
SWITCH-HILL DESCENT (S238)
C0878-1
W,0.5D,2135
(AUTO)
C0292-6
C0292-1
C0292-11
C0292-12
C0292-18
C0292-19
C0292-20
HEADER 0292 (K109)
C0292-2
K,0.5D,1430
C0256-54
DCU-AIRBAG (D171)
C0292-8
K,0.5D,1275
C0932-1
ECU-ELECTRONIC AUTOMATIC TRANSMISSION (D123)
C0292-3
K,0.5D,385
C0429-14
CENTRAL CONTROL UNIT (CCU) (D170)
C0292-5
K,0.5D,1410
C0040-7
DIAGNOSTIC SOCKET (V100)
C0292-7
K,0.5D,540
C0047-6 C0223-6
K,0.5D,1010
C0230-11
INSTRUMENT PACK (J100)
C0292-9
NG,0.75D,2030
C0244-7
SELECTOR-AUTOMATIC TRANSMISSION (S228)
C0292-10
NG,0.75D,2185
C0675-11
LAMP-AUTOMATIC GEARBOX SELECTOR INDICATOR (B113)
C0292-13
W,1.5D,520
C0580-3
FUSE BOX-PASSENGER COMPARTMENT (P101)
C0292-14
W,0.75D,2990
C1959-8
INTERFACE-CRUISE CONTROL (D245)
C0292-15
W,0.75D,260
C0652-1
SWITCH-BRAKE PEDAL (S215)
C0292-16
W,1.0D,2030
C0244-10
SELECTOR-AUTOMATIC TRANSMISSION (S228)
C0292-17
W,0.5D,980
C0571-1
FUSE BOX-ENGINE COMPARTMENT (P108)
VWR004140-A-04

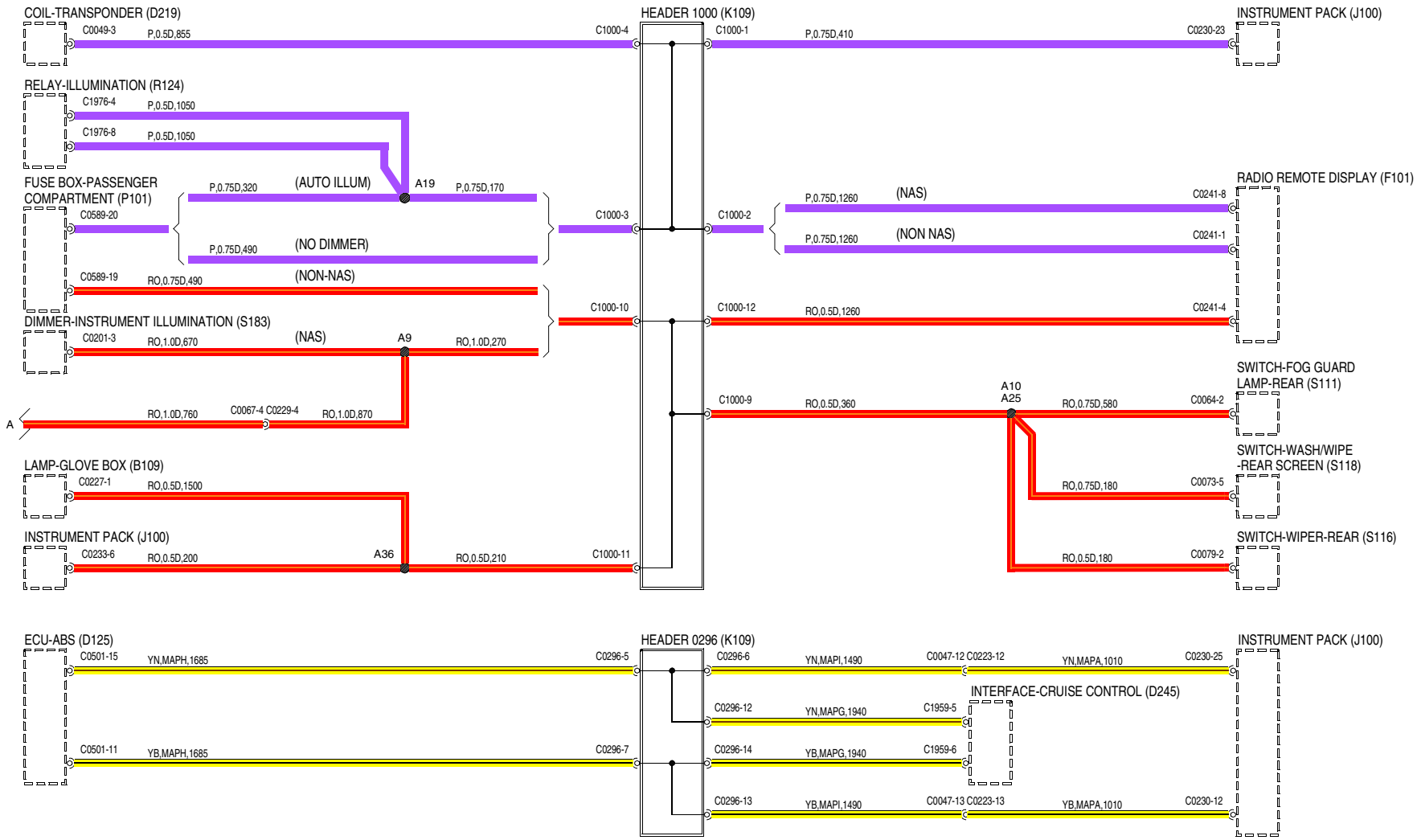

VWR004140-A-05

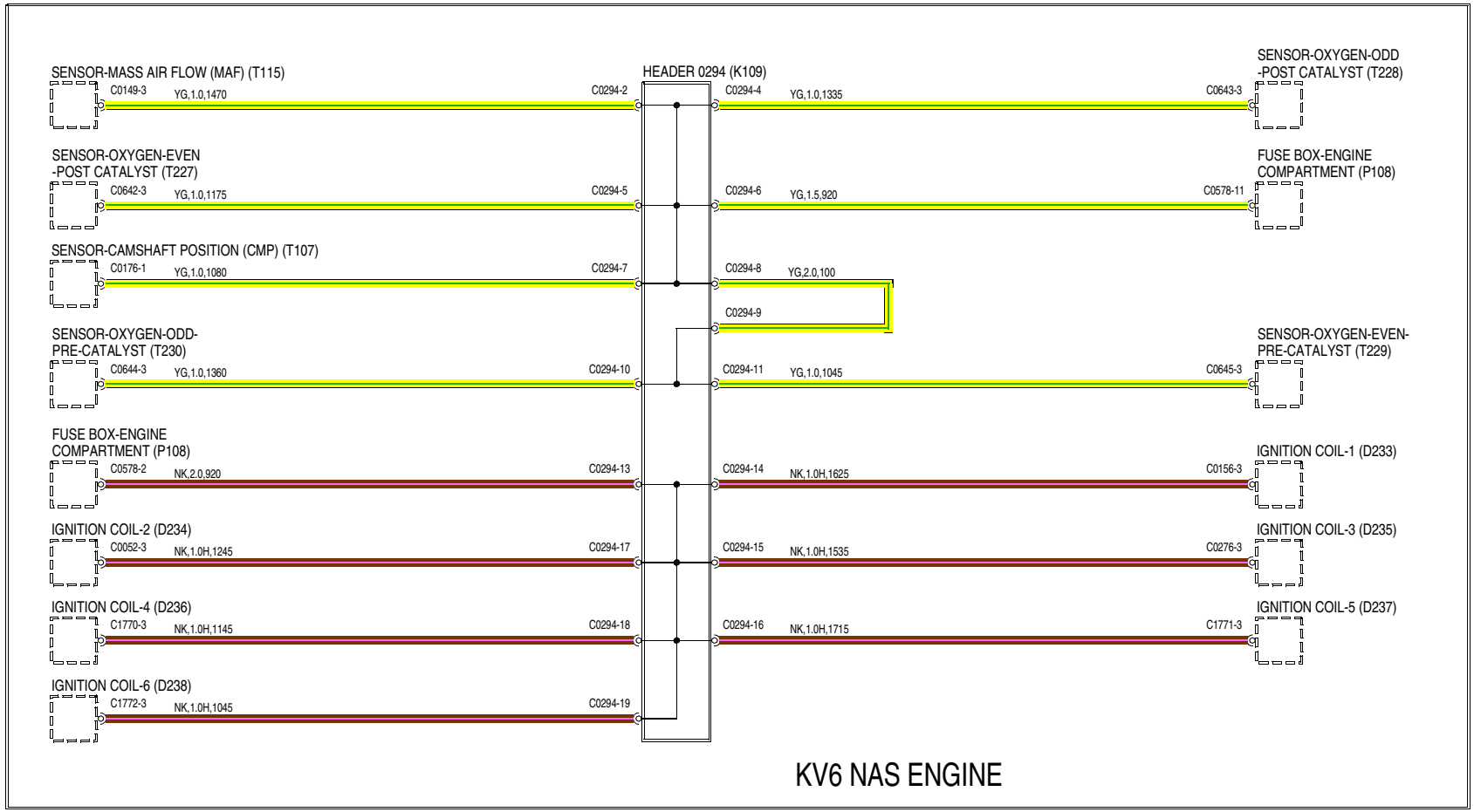

VWR004140-A-06

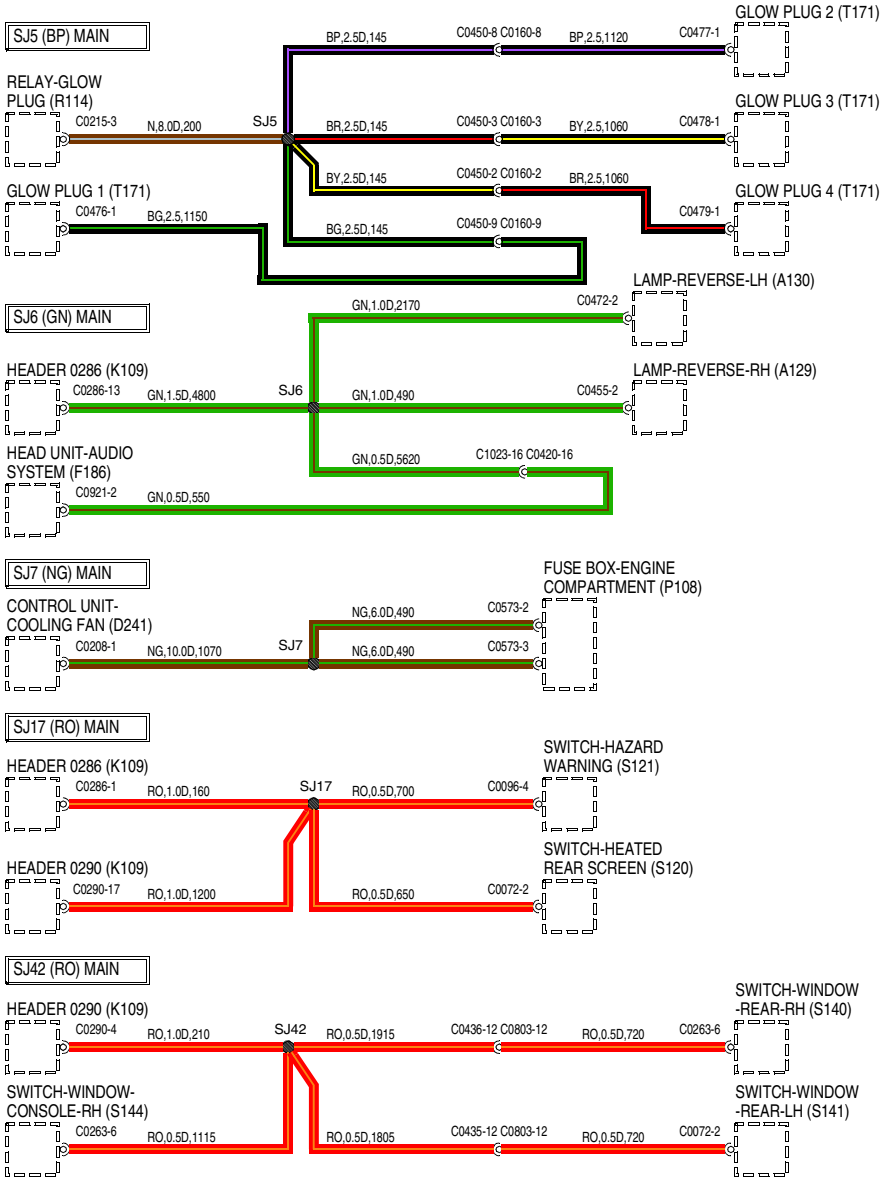
SJ5 (BP) MAIN
RELAY-GLOW PLUG (R114)
C0215-3
N,8.0D,200
SJ5
BP,2.5D,145
C0450-8 C0160-8
BP,2.5,1120
C0477-1
GLOW PLUG 2 (T171)
BR,2.5D,145
C0450-3 C0160-3
BY,2.5,1060
C0478-1
GLOW PLUG 3 (T171)
BY,2.5D,145
C0450-2 C0160-2
BR,2.5,1060
C0479-1
GLOW PLUG 4 (T171)
GLOW PLUG 1 (T171)
C0476-1
BG,2.5,1150
BG,2.5D,145
C0450-9 C0160-9
SJ6 (GN) MAIN
GN,1.0D,2170
C0472-2
LAMP-REVERSE-LH (A130)
HEADER 0286 (K109)
C0286-13
GN,1.5D,4800
SJ6
GN,1.0D,490
C0455-2
LAMP-REVERSE-RH (A129)
HEAD UNIT-AUDIO SYSTEM (F186)
C0921-2
GN,0.5D,550
GN,0.5D,5620
C1023-16 C0420-16
SJ7 (NG) MAIN
CONTROL UNIT-COOLING FAN (D241)
C0208-1
NG,10.0D,1070
SJ7
NG,6.0D,490
C0573-2
NG,6.0D,490
C0573-3
FUSE BOX-ENGINE COMPARTMENT (P108)
SJ17 (RO) MAIN
HEADER 0286 (K109)
C0286-1
RO,1.0D,160
SJ17
RO,0.5D,700
C0096-4
SWITCH-HAZARD WARNING (S121)
HEADER 0290 (K109)
C0290-17
RO,1.0D,1200
RO,0.5D,650
C0072-2
SWITCH-HEATED REAR SCREEN (S120)
SJ42 (RO) MAIN
HEADER 0290 (K109)
C0290-4
RO,1.0D,210
SJ42
RO,0.5D,1915
C0436-12 C0803-12
RO,0.5D,720
C0263-6
SWITCH-WINDOW -REAR-RH (S140)
SWITCH-WINDOW-CONSOLE-RH (S144)
C0263-6
RO,0.5D,1115
RO,0.5D,1805
C0435-12 C0803-12
RO,0.5D,720
C0072-2
SWITCH-WINDOW -REAR-LH (S141)
VWR004290-A-01

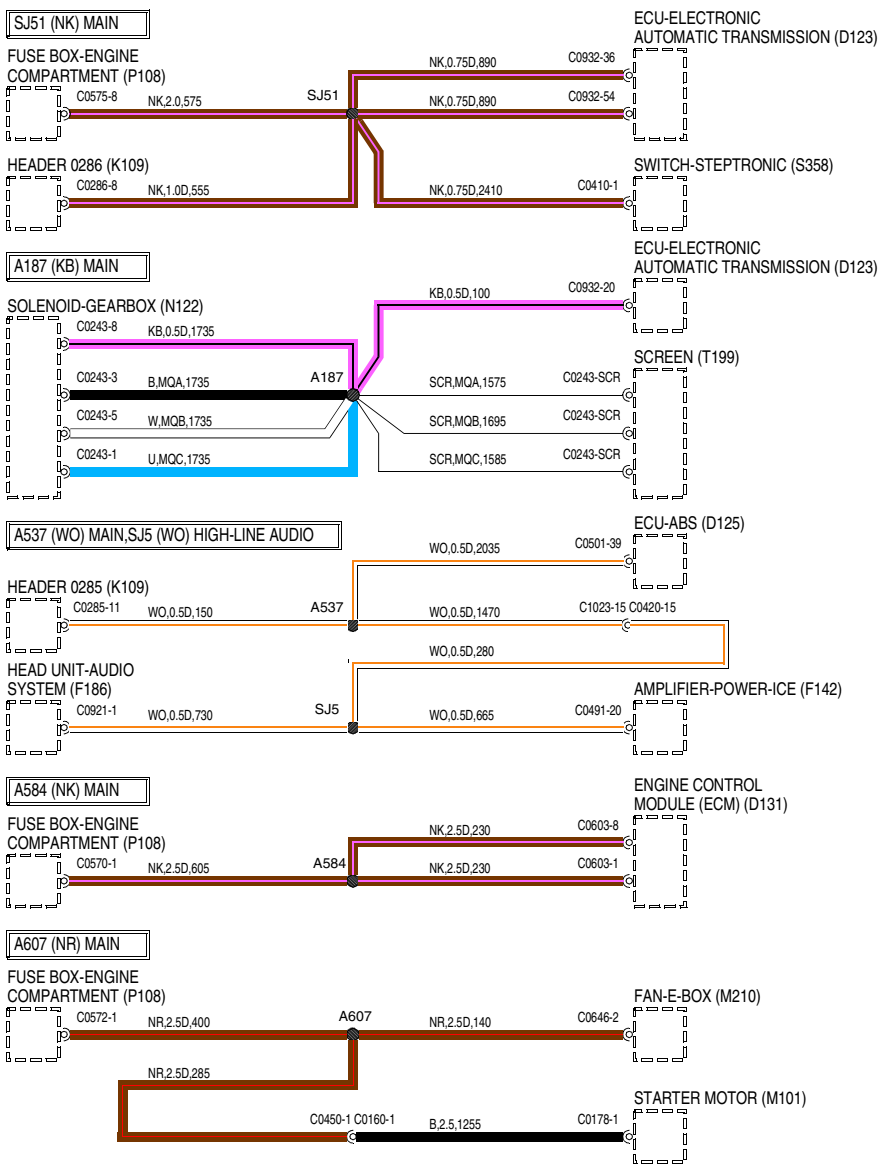
SJ51 (NK) MAIN
FUSE BOX-ENGINE COMPARTMENT (P108)
C0575-8
NK,2.0,575
SJ51
NK,0.75D,890
C0932-36
NK,0.75D,890
C0932-54
ECU-ELECTRONIC AUTOMATIC TRANSMISSION (D123)
HEADER 0286 (K109)
C0286-8
NK,1.0D,555
NK,0.75D,2410
C0410-1
SWITCH-STEPTRONIC (S358)
A187 (KB) MAIN
SOLENOID-GEARBOX (N122)
C0243-8
KB,0.5D,1735
KB,0.5D,100
C0932-20
ECU-ELECTRONIC AUTOMATIC TRANSMISSION (D123)
C0243-3
B,MQA,1735
A187
SCR,MQA,1575
C0243-SCR
SCREEN (T199)
C0243-5
W,MQB,1735
SCR,MQB,1695
C0243-SCR
C0243-1
U,MQC,1735
SCR,MQC,1585
C0243-SCR
A537 (WO) MAIN,SJ5 (WO) HIGH-LINE AUDIO
WO,0.5D,2035
C0501-39
ECU-ABS (D125)
HEADER 0285 (K109)
C0285-11
WO,0.5D,150
A537
WO,0.5D,1470
C1023-15 C0420-15
WO,0.5D,280
HEAD UNIT-AUDIO SYSTEM (F186)
C0921-1
WO,0.5D,730
SJ5
WO,0.5D,665
C0491-20
AMPLIFIER-POWER-ICE (F142)
A584 (NK) MAIN
FUSE BOX-ENGINE COMPARTMENT (P108)
C0570-1
NK,2.5D,605
A584
NK,2.5D,230
C0603-8
NK,2.5D,230
C0603-1
ENGINE CONTROL MODULE (ECM) (D131)
A607 (NR) MAIN
FUSE BOX-ENGINE COMPARTMENT (P108)
C0572-1
NR,2.5D,400
A607
NR,2.5D,140
C0646-2
FAN-E-BOX (M210)
NR,2.5D,285
C0450-1 C0160-1
B,2.5,1255
C0178-1
STARTER MOTOR (M101)

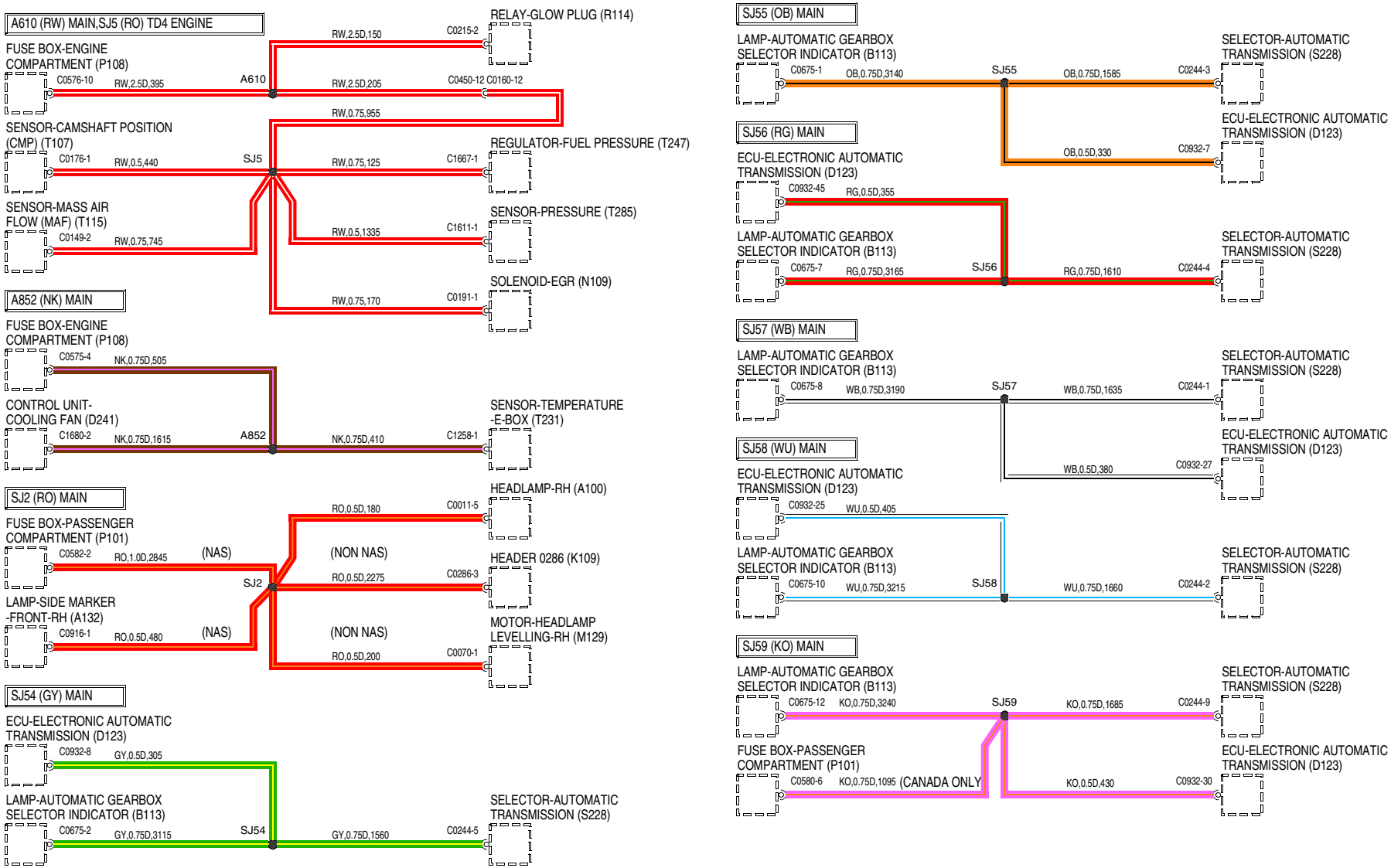
A610 (RW) MAIN,SJ5 (RO) TD4 ENGINE
FUSE BOX-ENGINE COMPARTMENT (P108)
C0576-10
RW,2.5D,395
A610
RW,2.5D,150
C0215-2
RELAY-GLOW PLUG (R114)
RW,2.5D,205
C0450-12 C0160-12
RW,0.75,955
SENSOR-CAMSHAFT POSITION (CMP) (T107)
C0176-1
RW,0.5,440
SJ5
RW,0.75,125
C1667-1
REGULATOR-FUEL PRESSURE (T247)
SENSOR-MASS AIR FLOW (MAF) (T115)
C0149-2
RW,0.75,745
RW,0.5,1335
C1611-1
SENSOR-PRESSURE (T285)
RW,0.75,170
C0191-1
SOLENOID-EGR (N109)
A852 (NK) MAIN
FUSE BOX-ENGINE COMPARTMENT (P108)
C0575-4
NK,0.75D,505
CONTROL UNIT-COOLING FAN (D241)
C1680-2
NK,0.75D,1615
A852
NK,0.75D,410
C1258-1
SENSOR-TEMPERATURE -E-BOX (T231)
SJ2 (RO) MAIN
FUSE BOX-PASSENGER COMPARTMENT (P101)
C0582-2
RO,1.0D,2845
(NAS)
RO,0.5D,180
C0011-5
HEADLAMP-RH (A100)
(NON NAS)
RO,0.5D,2275
C0286-3
HEADER 0286 (K109)
SJ2
LAMP-SIDE MARKER -FRONT-RH (A132)
C0916-1
RO,0.5D,480
(NAS)
(NON NAS)
RO,0.5D,200
C0070-1
MOTOR-HEADLAMP LEVELLING-RH (M129)
SJ54 (GY) MAIN
ECU-ELECTRONIC AUTOMATIC TRANSMISSION (D123)
C0932-8
GY,0.5D,305
LAMP-AUTOMATIC GEARBOX SELECTOR INDICATOR (B113)
C0675-2
GY,0.75D,3115
SJ54
GY,0.75D,1560
C0244-5
SELECTOR-AUTOMATIC TRANSMISSION (S228)
SJ55 (OB) MAIN
LAMP-AUTOMATIC GEARBOX SELECTOR INDICATOR (B113)
C0675-1
OB,0.75D,3140
SJ55
OB,0.75D,1585
C0244-3
SELECTOR-AUTOMATIC TRANSMISSION (S228)
OB,0.5D,330
C0932-7
ECU-ELECTRONIC AUTOMATIC TRANSMISSION (D123)
SJ56 (RG) MAIN
ECU-ELECTRONIC AUTOMATIC TRANSMISSION (D123)
C0932-45
RG,0.5D,355
LAMP-AUTOMATIC GEARBOX SELECTOR INDICATOR (B113)
C0675-7
RG,0.75D,3165
SJ56
RG,0.75D,1610
C0244-4
SELECTOR-AUTOMATIC TRANSMISSION (S228)
SJ57 (WB) MAIN
LAMP-AUTOMATIC GEARBOX SELECTOR INDICATOR (B113)
C0675-8
WB,0.75D,3190
SJ57
WB,0.75D,1635
C0244-1
SELECTOR-AUTOMATIC TRANSMISSION (S228)
WB,0.5D,380
C0932-27
ECU-ELECTRONIC AUTOMATIC TRANSMISSION (D123)
SJ58 (WU) MAIN
ECU-ELECTRONIC AUTOMATIC TRANSMISSION (D123)
C0932-25
WU,0.5D,405
LAMP-AUTOMATIC GEARBOX SELECTOR INDICATOR (B113)
C0675-10
WU,0.75D,3215
SJ58
WU,0.75D,1660
C0244-2
SELECTOR-AUTOMATIC TRANSMISSION (S228)
SJ59 (KO) MAIN
LAMP-AUTOMATIC GEARBOX SELECTOR INDICATOR (B113)
C0675-12
KO,0.75D,3240
SJ59
KO,0.75D,1685
C0244-9
SELECTOR-AUTOMATIC TRANSMISSION (S228)
FUSE BOX-PASSENGER COMPARTMENT (P101)
C0580-6
KO,0.75D,1095
(CANADA ONLY)
KO,0.5D,430
C0932-30
ECU-ELECTRONIC AUTOMATIC TRANSMISSION (D123)
VWR004290-A-02

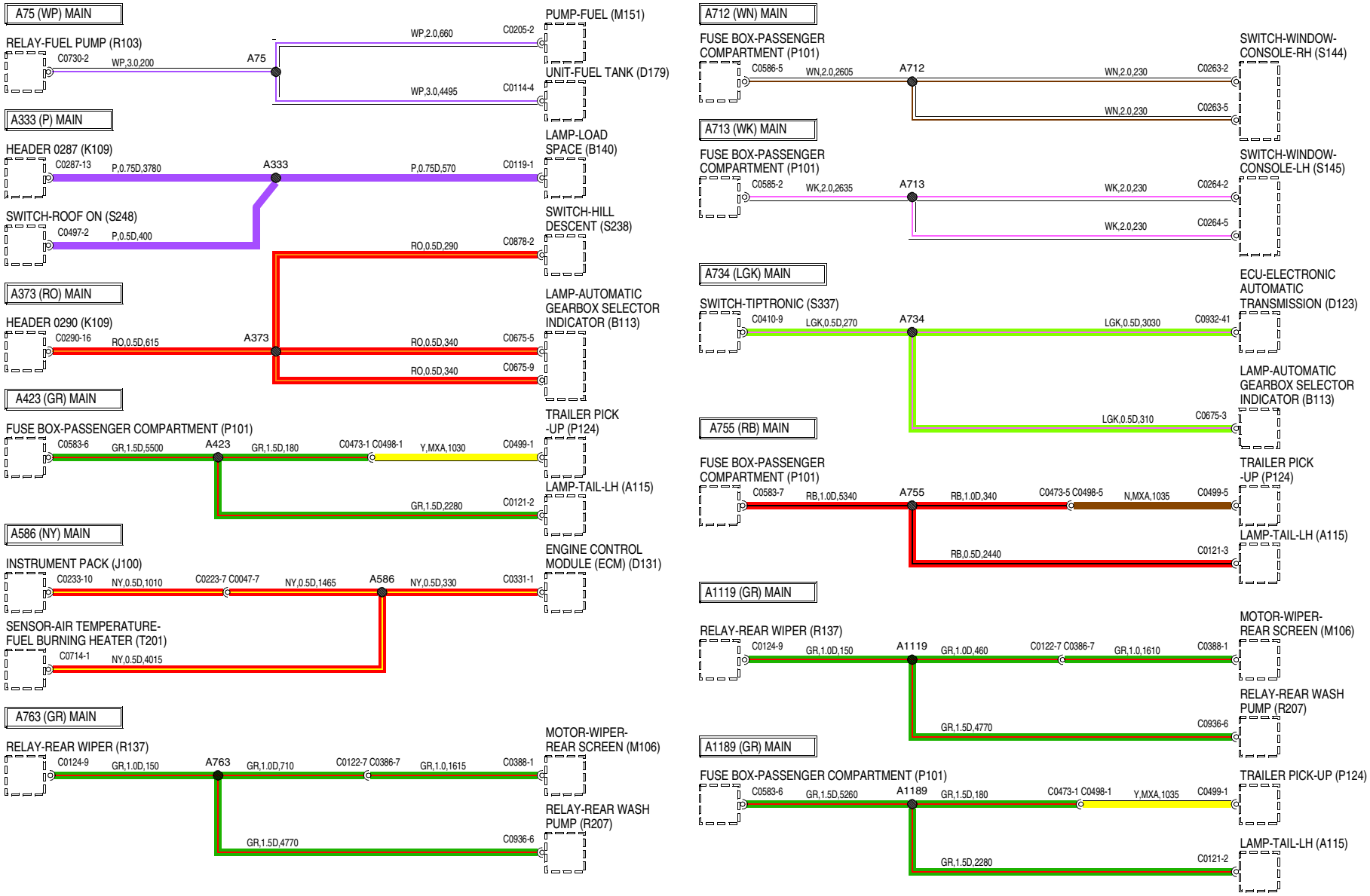
A75 (WP) MAIN
RELAY-FUEL PUMP (R103)
C0730-2
WP,3.0,200
A75
WP,2.0,660
C0205-2
PUMP-FUEL (M151)
WP,3.0,4495
C0114-4
UNIT-FUEL TANK (D179)
A333 (P) MAIN
HEADER 0287 (K109)
C0287-13
P,0.75D,3780
A333
P,0.75D,570
C0119-1
LAMP-LOAD SPACE (B140)
SWITCH-ROOF ON (S248)
C0497-2
P,0.5D,400
RO,0.5D,290
C0878-2
SWITCH-HILL DESCENT (S238)
A373 (RO) MAIN
HEADER 0290 (K109)
C0290-16
RO,0.5D,615
A373
RO,0.5D,340
C0675-5
RO,0.5D,340
C0675-9
LAMP-AUTOMATIC GEARBOX SELECTOR INDICATOR (B113)
A423 (GR) MAIN
FUSE BOX-PASSENGER COMPARTMENT (P101)
C0583-6
GR,1.5D,5500
A423
GR,1.5D,180
C0473-1 C0498-1
Y,MXA,1030
C0499-1
TRAILER PICK -UP (P124)
GR,1.5D,2280
C0121-2
LAMP-TAIL-LH (A115)
A586 (NY) MAIN
INSTRUMENT PACK (J100)
C0233-10
NY,0.5D,1010
C0223-7 C0047-7
NY,0.5D,1465
A586
NY,0.5D,330
C0331-1
ENGINE CONTROL MODULE (ECM) (D131)
SENSOR-AIR TEMPERATURE-FUEL BURNING HEATER (T201)
C0714-1
NY,0.5D,4015
A763 (GR) MAIN
RELAY-REAR WIPER (R137)
C0124-9
GR,1.0D,150
A763
GR,1.0D,710
C0122-7 C0386-7
GR,1.0,1615
C0388-1
MOTOR-WIPER-REAR SCREEN (M106)
GR,1.5D,4770
C0936-6
RELAY-REAR WASH PUMP (R207)
A712 (WN) MAIN
FUSE BOX-PASSENGER COMPARTMENT (P101)
C0586-5
WN,2.0,2605
A712
WN,2.0,230
C0263-2
WN,2.0,230
C0263-5
SWITCH-WINDOW-CONSOLE-RH (S144)
A713 (WK) MAIN
FUSE BOX-PASSENGER COMPARTMENT (P101)
C0585-2
WK,2.0,2635
A713
WK,2.0,230
C0264-2
WK,2.0,230
C0264-5
SWITCH-WINDOW-CONSOLE-LH (S145)
A734 (LGK) MAIN
SWITCH-TIPTRONIC (S337)
C0410-9
LGK,0.5D,270
A734
LGK,0.5D,3030
C0932-41
ECU-ELECTRONIC AUTOMATIC TRANSMISSION (D123)
LGK,0.5D,310
C0675-3
LAMP-AUTOMATIC GEARBOX SELECTOR INDICATOR (B113)
A755 (RB) MAIN
FUSE BOX-PASSENGER COMPARTMENT (P101)
C0583-7
RB,1.0D,5340
A755
RB,1.0D,340
C0473-5 C0498-5
N,MXA,1035
C0499-5
TRAILER PICK -UP (P124)
RB,0.5D,2440
C0121-3
LAMP-TAIL-LH (A115)
A1119 (GR) MAIN
RELAY-REAR WIPER (R137)
C0124-9
GR,1.0D,150
A1119
GR,1.0D,460
C0122-7 C0386-7
GR,1.0,1610
C0388-1
MOTOR-WIPER-REAR SCREEN (M106)
GR,1.5D,4770
C0936-6
RELAY-REAR WASH PUMP (R207)
A1189 (GR) MAIN
FUSE BOX-PASSENGER COMPARTMENT (P101)
C0583-6
GR,1.5D,5260
A1189
GR,1.5D,180
C0473-1 C0498-1
Y,MXA,1035
C0499-1
TRAILER PICK-UP (P124)
GR,1.5D,2280
C0121-2
LAMP-TAIL-LH (A115)
VWR004290-A-03

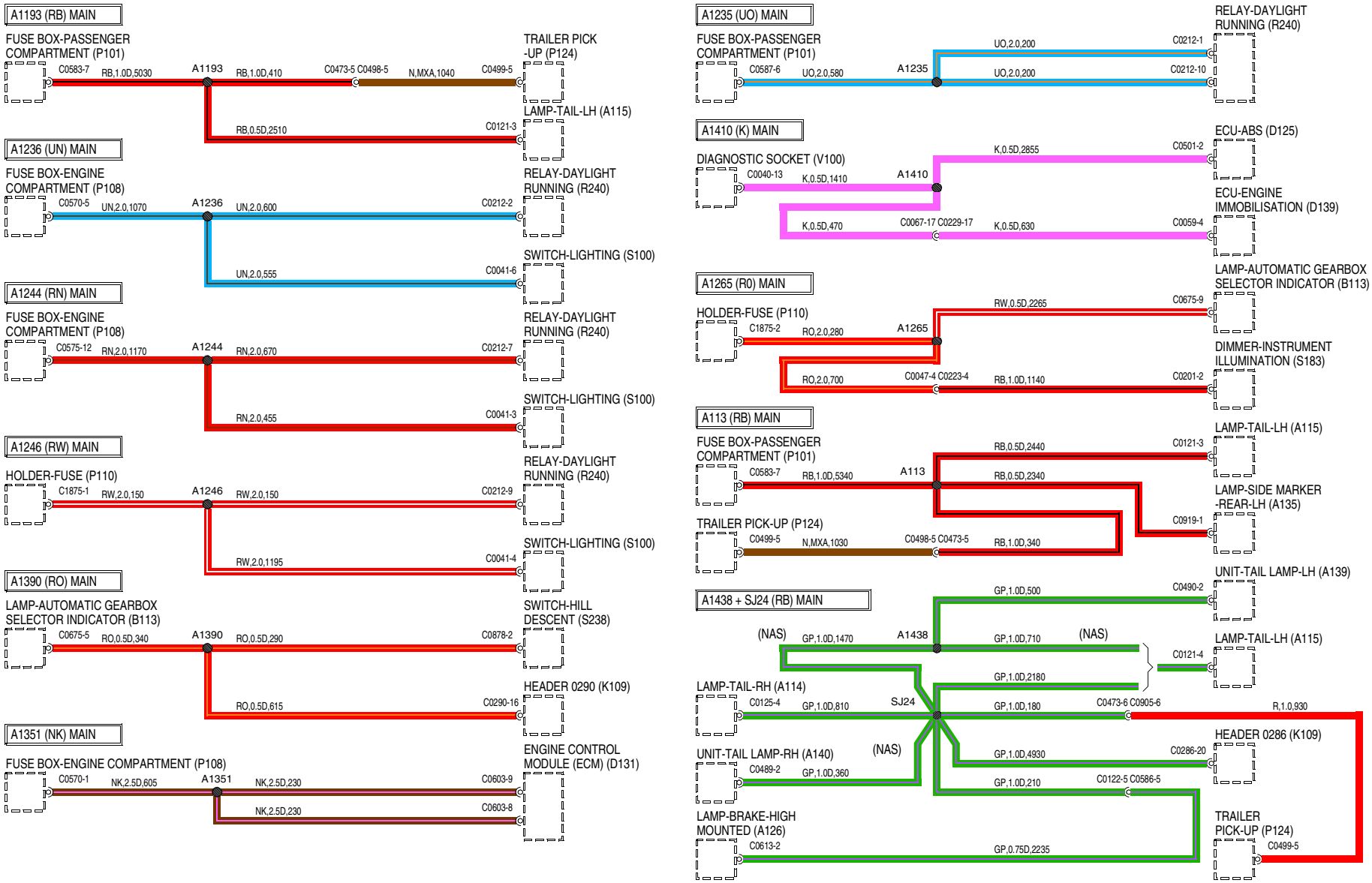
A1193 (RB) MAIN
FUSE BOX-PASSENGER COMPARTMENT (P101)
C0583-7
RB,1.0D,5030
A1193
RB,1.0D,410
C0473-5 C0498-5
N,MXA,1040
C0499-5
TRAILER PICK -UP (P124)
RB,0.5D,2510
C0121-3
LAMP-TAIL-LH (A115)
A1236 (UN) MAIN
FUSE BOX-ENGINE COMPARTMENT (P108)
C0570-5
UN,2.0,1070
A1236
UN,2.0,600
C0212-2
RELAY-DAYLIGHT RUNNING (R240)
UN,2.0,555
C0041-6
SWITCH-LIGHTING (S100)
A1244 (RN) MAIN
FUSE BOX-ENGINE COMPARTMENT (P108)
C0575-12
RN,2.0,1170
A1244
RN,2.0,670
C0212-7
RELAY-DAYLIGHT RUNNING (R240)
RN,2.0,455
C0041-3
SWITCH-LIGHTING (S100)
A1246 (RW) MAIN
HOLDER-FUSE (P110)
C1875-1
RW,2.0,150
A1246
RW,2.0,150
C0212-9
RELAY-DAYLIGHT RUNNING (R240)
RW,2.0,1195
C0041-4
SWITCH-LIGHTING (S100)
A1390 (RO) MAIN
LAMP-AUTOMATIC GEARBOX SELECTOR INDICATOR (B113)
C0675-5
RO,0.5D,340
A1390
RO,0.5D,290
C0878-2
SWITCH-HILL DESCENT (S238)
RO,0.5D,615
C0290-16
HEADER 0290 (K109)
A1351 (NK) MAIN
FUSE BOX-ENGINE COMPARTMENT (P108)
C0570-1
NK,2.5D,605
A1351
NK,2.5D,230
C0603-9
ENGINE CONTROL MODULE (ECM) (D131)
NK,2.5D,230
C0603-8
A1235 (UO) MAIN
FUSE BOX-PASSENGER COMPARTMENT (P101)
C0587-6
UO,2.0,580
A1235
UO,2.0,200
C0212-1
RELAY-DAYLIGHT RUNNING (R240)
UO,2.0,200
C0212-10
A1410 (K) MAIN
DIAGNOSTIC SOCKET (V100)
C0040-13
K,0.5D,1410
A1410
K,0.5D,2855
C0501-2
ECU-ABS (D125)
K,0.5D,470
C0067-17 C0229-17
K,0.5D,630
C0059-4
ECU-ENGINE IMMOBILISATION (D139)
A1265 (R0) MAIN
HOLDER-FUSE (P110)
C1875-2
RO,2.0,280
A1265
RW,0.5D,2265
C0675-9
LAMP-AUTOMATIC GEARBOX SELECTOR INDICATOR (B113)
RO,2.0,700
C0047-4 C0223-4
RB,1.0D,1140
C0201-2
DIMMER-INSTRUMENT ILLUMINATION (S183)
A113 (RB) MAIN
FUSE BOX-PASSENGER COMPARTMENT (P101)
C0583-7
RB,1.0D,5340
A113
RB,0.5D,2440
C0121-3
LAMP-TAIL-LH (A115)
RB,0.5D,2340
C0919-1
LAMP-SIDE MARKER -REAR-LH (A135)
TRAILER PICK-UP (P124)
C0499-5
N,MXA,1030
C0498-5 C0473-5
RB,1.0D,340
A1438 + SJ24 (RB) MAIN
GP,1.0D,500
C0490-2
UNIT-TAIL LAMP-LH (A139)
(NAS)
GP,1.0D,1470
A1438
GP,1.0D,710
(NAS)
C0121-4
LAMP-TAIL-LH (A115)
GP,1.0D,2180
LAMP-TAIL-RH (A114)
C0125-4
GP,1.0D,810
SJ24
GP,1.0D,180
C0473-6 C0905-6
R,1.0,930
HEADER 0286 (K109)
UNIT-TAIL LAMP-RH (A140)
C0489-2
GP,1.0D,360
(NAS)
GP,1.0D,4930
C0286-20
GP,1.0D,210
C0122-5 C0586-5
LAMP-BRAKE-HIGH MOUNTED (A126)
C0613-2
GP,0.75D,2235
TRAILER PICK-UP (P124)
C0499-5
VWR004290-A-04

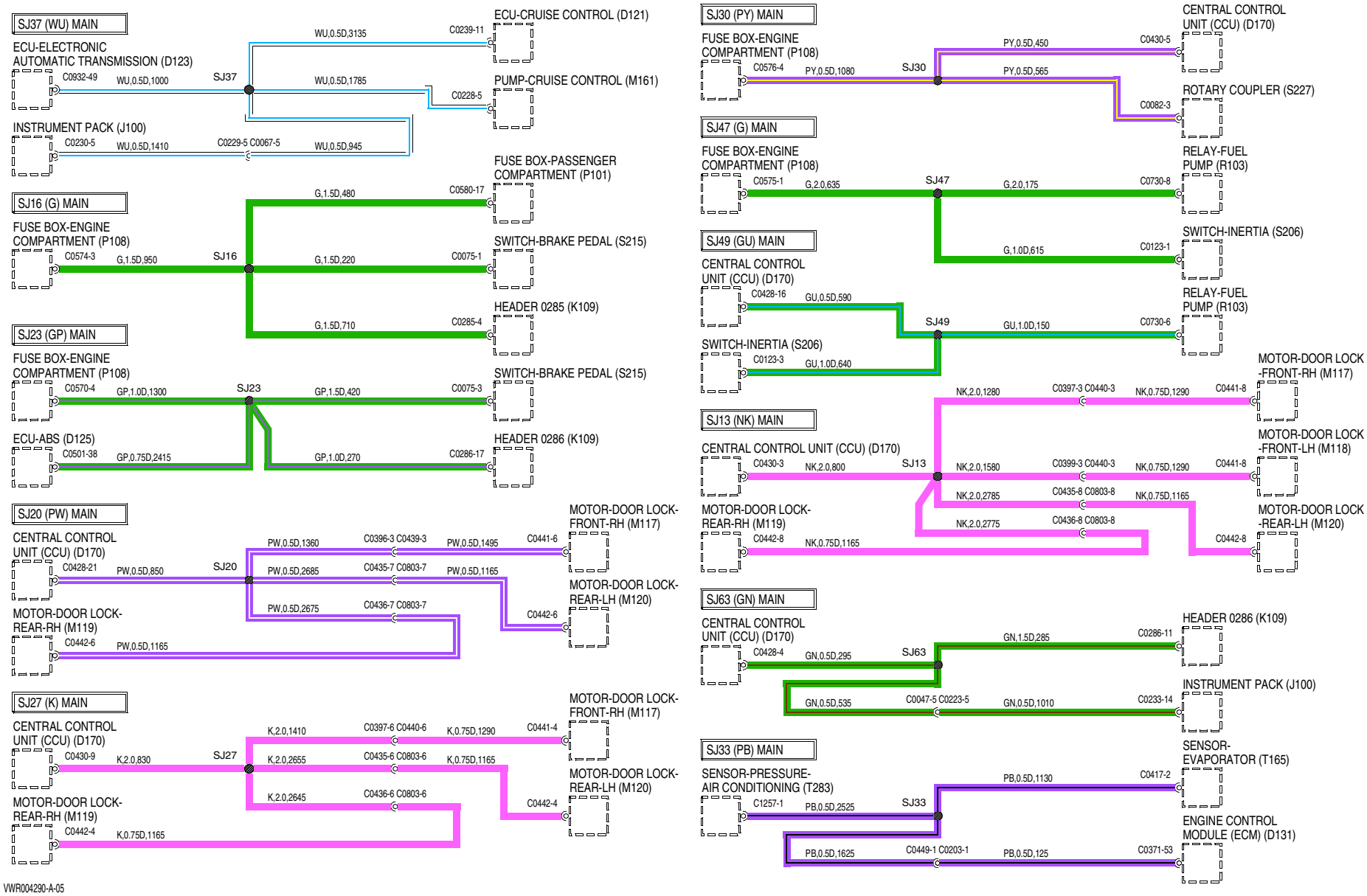
SJ37 (WU) MAIN
ECU-ELECTRONIC AUTOMATIC TRANSMISSION (D123)
C0932-49
WU,0.5D,1000
SJ37
WU,0.5D,3135
C0239-11
ECU-CRUISE CONTROL (D121)
WU,0.5D,1785
C0228-5
PUMP-CRUISE CONTROL (M161)
INSTRUMENT PACK (J100)
C0230-5
WU,0.5D,1410
C0229-5 C0067-5
WU,0.5D,945
SJ16 (G) MAIN
FUSE BOX-ENGINE COMPARTMENT (P108)
C0574-3
G,1.5D,950
SJ16
G,1.5D,480
C0580-17
FUSE BOX-PASSENGER COMPARTMENT (P101)
G,1.5D,220
C0075-1
SWITCH-BRAKE PEDAL (S215)
G,1.5D,710
C0285-4
HEADER 0285 (K109)
SJ23 (GP) MAIN
FUSE BOX-ENGINE COMPARTMENT (P108)
C0570-4
GP,1.0D,1300
SJ23
GP,1.5D,420
C0075-3
SWITCH-BRAKE PEDAL (S215)
ECU-ABS (D125)
C0501-38
GP,0.75D,2415
GP,1.0D,270
C0286-17
HEADER 0286 (K109)
SJ20 (PW) MAIN
CENTRAL CONTROL UNIT (CCU) (D170)
C0428-21
PW,0.5D,850
SJ20
PW,0.5D,1360
C0396-3 C0439-3
PW,0.5D,1495
C0441-6
MOTOR-DOOR LOCK-FRONT-RH (M117)
PW,0.5D,2685
C0435-7 C0803-7
PW,0.5D,1165
MOTOR-DOOR LOCK-REAR-RH (M120)
PW,0.5D,2675
C0436-7 C0803-7
C0442-6
MOTOR-DOOR LOCK-REAR-RH (M119)
C0442-6
PW,0.5D,1165
SJ27 (K) MAIN
CENTRAL CONTROL UNIT (CCU) (D170)
C0430-9
K,2.0,830
SJ27
K,2.0,1410
C0397-6 C0440-6
K,0.75D,1290
C0441-4
MOTOR-DOOR LOCK-FRONT-RH (M117)
K,2.0,2655
C0435-6 C0803-6
K,0.75D,1165
MOTOR-DOOR LOCK-REAR-LH (M120)
K,2.0,2645
C0436-6 C0803-6
C0442-4
MOTOR-DOOR LOCK-REAR-RH (M119)
C0442-4
K,0.75D,1165
SJ30 (PY) MAIN
FUSE BOX-ENGINE COMPARTMENT (P108)
C0576-4
PY,0.5D,1080
SJ30
PY,0.5D,450
C0430-5
CENTRAL CONTROL UNIT (CCU) (D170)
PY,0.5D,565
C0082-3
ROTARY COUPLER (S227)
SJ47 (G) MAIN
FUSE BOX-ENGINE COMPARTMENT (P108)
C0575-1
G,2.0,635
SJ47
G,2.0,175
C0730-8
RELAY-FUEL PUMP (R103)
G,1.0D,615
C0123-1
SWITCH-INERTIA (S206)
SJ49 (GU) MAIN
CENTRAL CONTROL UNIT (CCU) (D170)
C0428-16
GU,0.5D,590
SJ49
GU,1.0D,150
C0730-6
RELAY-FUEL PUMP (R103)
SWITCH-INERTIA (S206)
C0123-3
GU,1.0D,640
SJ13 (NK) MAIN
CENTRAL CONTROL UNIT (CCU) (D170)
C0430-3
NK,2.0,800
SJ13
NK,2.0,1280
C0397-3 C0440-3
NK,0.75D,1290
C0441-8
MOTOR-DOOR LOCK-FRONT-RH (M117)
NK,2.0,1580
C0399-3 C0440-3
NK,0.75D,1290
C0441-8
MOTOR-DOOR LOCK-FRONT-LH (M118)
NK,2.0,2785
C0435-8 C0803-8
NK,0.75D,1165
MOTOR-DOOR LOCK-REAR-LH (M120)
NK,2.0,2775
C0436-8 C0803-8
C0442-8
MOTOR-DOOR LOCK-REAR-RH (M119)
C0442-8
NK,0.75D,1165
SJ63 (GN) MAIN
CENTRAL CONTROL UNIT (CCU) (D170)
C0428-4
GN,0.5D,295
SJ63
GN,1.5D,285
C0286-11
HEADER 0286 (K109)
GN,0.5D,535
C0047-5 C0223-5
GN,0.5D,1010
C0233-14
INSTRUMENT PACK (J100)
SJ33 (PB) MAIN
SENSOR-PRESSURE-AIR CONDITIONING (T283)
C1257-1
PB,0.5D,2525
SJ33
PB,0.5D,1130
C0417-2
SENSOR-EVAPORATOR (T165)
PB,0.5D,1625
C0449-1 C0203-1
PB,0.5D,125
C0371-53
ENGINE CONTROL MODULE (ECM) (D131)
VWR004290-A-05

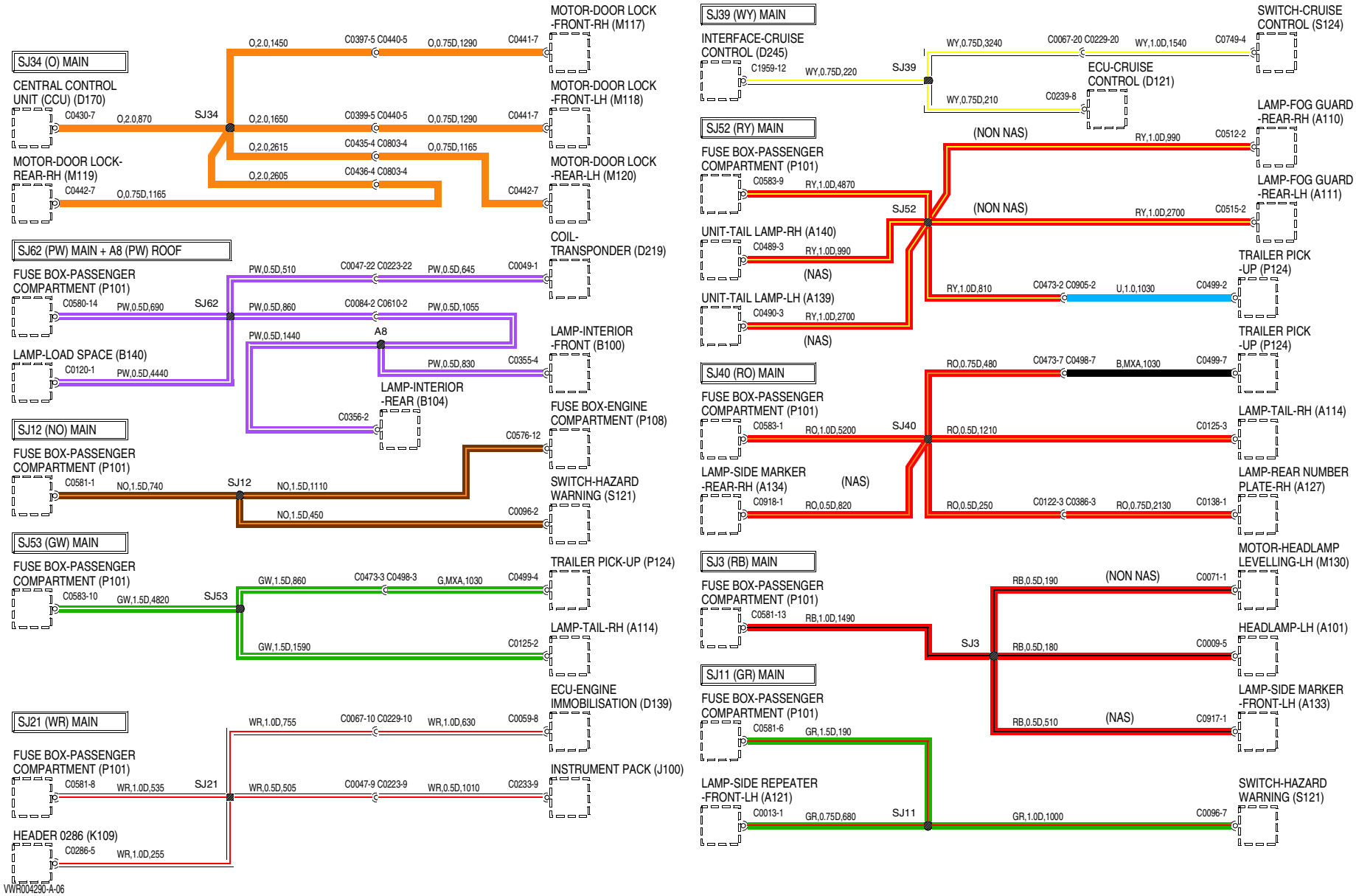
SJ34 (O) MAIN
CENTRAL CONTROL UNIT (CCU) (D170)
C0430-7
O,2.0,870
SJ34
O,2.0,1450
C0397-5 C0440-5
O,0.75D,1290
C0441-7
MOTOR-DOOR LOCK -FRONT-RH (M117)
O,2.0,1650
C0399-5 C0440-5
O,0.75D,1290
C0441-7
MOTOR-DOOR LOCK -FRONT-LH (M118)
O,2.0,2615
C0435-4 C0803-4
O,0.75D,1165
MOTOR-DOOR LOCK -REAR-LH (M120)
O,2.0,2605
C0436-4 C0803-4
C0442-7
O,0.75D,1165
MOTOR-DOOR LOCK-REAR-RH (M119)
SJ62 (PW) MAIN + A8 (PW) ROOF
FUSE BOX-PASSENGER COMPARTMENT (P101)
C0580-14
PW,0.5D,690
SJ62
PW,0.5D,510
C0047-22 C0223-22
PW,0.5D,645
C0049-1
COIL-TRANSPONDER (D219)
PW,0.5D,860
C0084-2 C0610-2
PW,0.5D,1055
PW,0.5D,1440
A8
PW,0.5D,830
C0355-4
LAMP-INTERIOR -FRONT (B100)
LAMP-LOAD SPACE (B140)
C0120-1
PW,0.5D,4440
LAMP-INTERIOR -REAR (B104)
C0356-2
SJ12 (NO) MAIN
FUSE BOX-PASSENGER COMPARTMENT (P101)
C0581-1
NO,1.5D,740
SJ12
NO,1.5D,1110
C0576-12
FUSE BOX-ENGINE COMPARTMENT (P108)
NO,1.5D,450
C0096-2
SWITCH-HAZARD WARNING (S121)
SJ53 (GW) MAIN
FUSE BOX-PASSENGER COMPARTMENT (P101)
C0583-10
GW,1.5D,4820
SJ53
GW,1.5D,860
C0473-3 C0498-3
G,MXA,1030
C0499-4
TRAILER PICK-UP (P124)
GW,1.5D,1590
C0125-2
LAMP-TAIL-RH (A114)
SJ21 (WR) MAIN
FUSE BOX-PASSENGER COMPARTMENT (P101)
C0581-8
WR,1.0D,535
SJ21
WR,1.0D,755
C0067-10 C0229-10
WR,1.0D,630
C0059-8
ECU-ENGINE IMMOBILISATION (D139)
WR,0.5D,505
C0047-9 C0223-9
WR,0.5D,1010
C0233-9
INSTRUMENT PACK (J100)
HEADER 0286 (K109)
C0286-5
WR,1.0D,255
VWR004290-A-06
SJ39 (WY) MAIN
INTERFACE-CRUISE CONTROL (D245)
C1959-12
WY,0.75D,220
SJ39
WY,0.75D,3240
C0067-20 C0229-20
WY,1.0D,1540
C0749-4
SWITCH-CRUISE CONTROL (S124)
ECU-CRUISE CONTROL (D121)
WY,0.75D,210
C0239-8
SJ52 (RY) MAIN
FUSE BOX-PASSENGER COMPARTMENT (P101)
C0583-9
RY,1.0D,4870
SJ52
(NON NAS)
RY,1.0D,990
C0512-2
LAMP-FOG GUARD -REAR-RH (A110)
(NON NAS)
RY,1.0D,2700
C0515-2
LAMP-FOG GUARD -REAR-LH (A111)
UNIT-TAIL LAMP-RH (A140)
C0489-3
RY,1.0D,990
(NAS)
UNIT-TAIL LAMP-LH (A139)
C0490-3
RY,1.0D,2700
(NAS)
RY,1.0D,810
C0473-2 C0905-2
U,1.0,1030
C0499-2
TRAILER PICK -UP (P124)
TRAILER PICK -UP (P124)
SJ40 (RO) MAIN
FUSE BOX-PASSENGER COMPARTMENT (P101)
C0583-1
RO,1.0D,5200
SJ40
RO,0.75D,480
C0473-7 C0498-7
B,MXA,1030
C0499-7
RO,0.5D,1210
C0125-3
LAMP-TAIL-RH (A114)
LAMP-SIDE MARKER -REAR-RH (A134)
C0918-1
RO,0.5D,820
(NAS)
RO,0.5D,250
C0122-3 C0386-3
RO,0.75D,2130
C0138-1
LAMP-REAR NUMBER PLATE-RH (A127)
SJ3 (RB) MAIN
FUSE BOX-PASSENGER COMPARTMENT (P101)
C0581-13
RB,1.0D,1490
SJ3
RB,0.5D,190
(NON NAS)
C0071-1
MOTOR-HEADLAMP LEVELLING-LH (M130)
RB,0.5D,180
C0009-5
HEADLAMP-LH (A101)
RB,0.5D,510
(NAS)
C0917-1
LAMP-SIDE MARKER -FRONT-LH (A133)
SJ11 (GR) MAIN
FUSE BOX-PASSENGER COMPARTMENT (P101)
C0581-6
GR,1.5D,190
LAMP-SIDE REPEATER -FRONT-LH (A121)
C0013-1
GR,0.75D,680
SJ11
GR,1.0D,1000
C0096-7
SWITCH-HAZARD WARNING (S121)

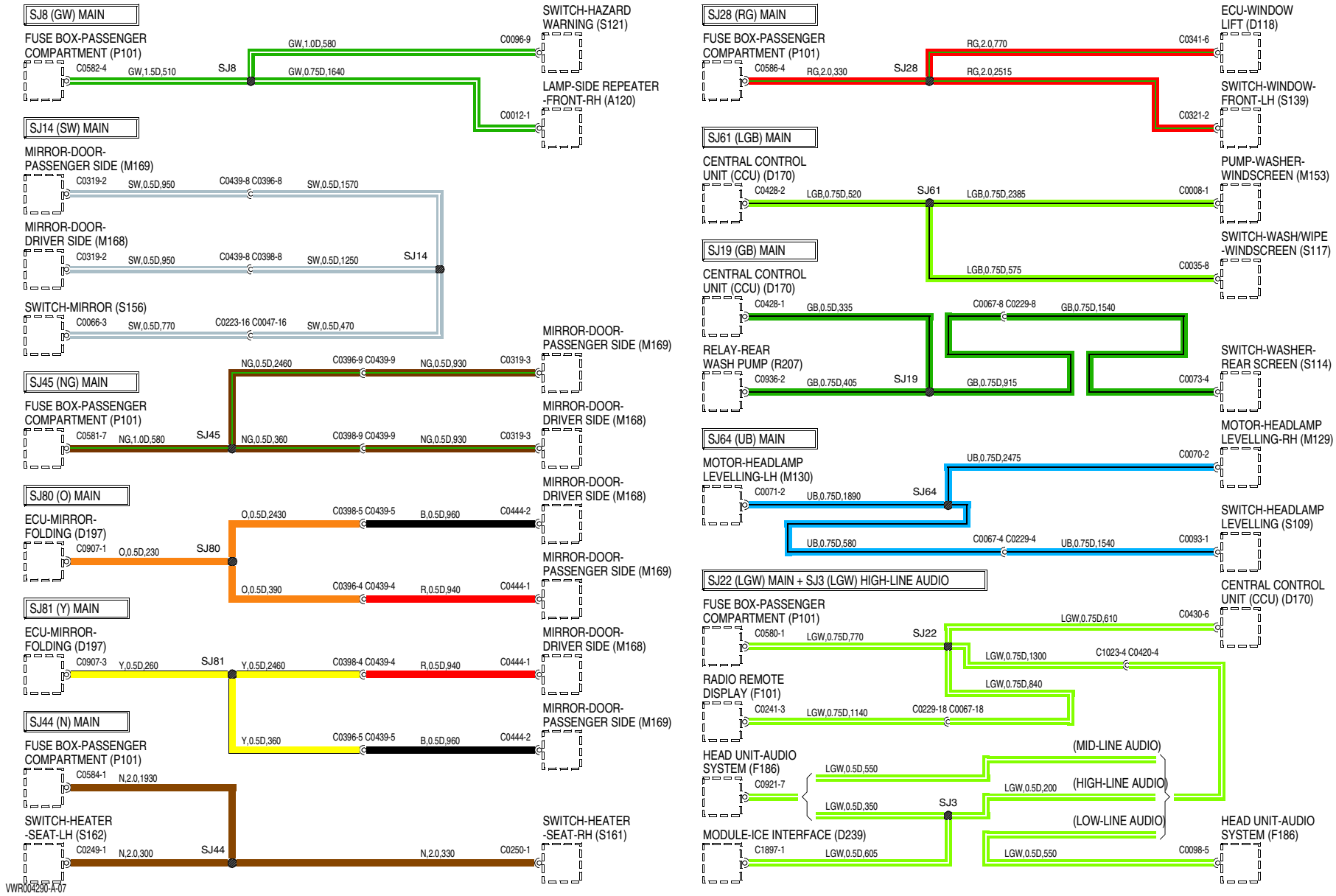
SJ8 (GW) MAIN
FUSE BOX-PASSENGER COMPARTMENT (P101)
C0582-4
GW,1.5D,510
SJ8
GW,1.0D,580
C0096-9
SWITCH-HAZARD WARNING (S121)
GW,0.75D,1640
C0012-1
LAMP-SIDE REPEATER -FRONT-RH (A120)
SJ14 (SW) MAIN
MIRROR-DOOR-PASSENGER SIDE (M169)
C0319-2
SW,0.5D,950
C0439-8 C0396-8
SW,0.5D,1570
MIRROR-DOOR-DRIVER SIDE (M168)
C0319-2
SW,0.5D,950
C0439-8 C0398-8
SW,0.5D,1250
SJ14
SWITCH-MIRROR (S156)
C0066-3
SW,0.5D,770
C0223-16 C0047-16
SW,0.5D,470
SJ45 (NG) MAIN
FUSE BOX-PASSENGER COMPARTMENT (P101)
C0581-7
NG,1.0D,580
SJ45
NG,0.5D,2460
C0396-9 C0439-9
NG,0.5D,930
C0319-3
MIRROR-DOOR-PASSENGER SIDE (M169)
NG,0.5D,360
C0398-9 C0439-9
NG,0.5D,930
C0319-3
MIRROR-DOOR-DRIVER SIDE (M168)
SJ80 (O) MAIN
ECU-MIRROR-FOLDING (D197)
C0907-1
O,0.5D,230
SJ80
O,0.5D,2430
C0398-5 C0439-5
B,0.5D,960
C0444-2
MIRROR-DOOR-DRIVER SIDE (M168)
O,0.5D,390
C0396-4 C0439-4
R,0.5D,940
C0444-1
MIRROR-DOOR-PASSENGER SIDE (M169)
SJ81 (Y) MAIN
ECU-MIRROR-FOLDING (D197)
C0907-3
Y,0.5D,260
SJ81
Y,0.5D,2460
C0398-4 C0439-4
R,0.5D,940
C0444-1
MIRROR-DOOR-DRIVER SIDE (M168)
Y,0.5D,360
C0396-5 C0439-5
B,0.5D,960
C0444-2
MIRROR-DOOR-PASSENGER SIDE (M169)
SJ44 (N) MAIN
FUSE BOX-PASSENGER COMPARTMENT (P101)
C0584-1
N,2.0,1930
SWITCH-HEATER -SEAT-LH (S162)
C0249-1
N,2.0,300
SJ44
N,2.0,330
C0250-1
SWITCH-HEATER -SEAT-RH (S161)
VWR004290-A-07
SJ28 (RG) MAIN
FUSE BOX-PASSENGER COMPARTMENT (P101)
C0586-4
RG,2.0,330
SJ28
RG,2.0,770
C0341-6
ECU-WINDOW LIFT (D118)
RG,2.0,2515
C0321-2
SWITCH-WINDOW-FRONT-LH (S139)
SJ61 (LGB) MAIN
CENTRAL CONTROL UNIT (CCU) (D170)
C0428-2
LGB,0.75D,520
SJ61
LGB,0.75D,2385
C0008-1
PUMP-WASHER-WINDSCREEN (M153)
LGB,0.75D,575
C0035-8
SWITCH-WASH/WIPE -WINDSCREEN (S117)
SJ19 (GB) MAIN
CENTRAL CONTROL UNIT (CCU) (D170)
C0428-1
GB,0.5D,335
C0067-8 C0229-8
GB,0.75D,1540
RELAY-REAR WASH PUMP (R207)
C0936-2
GB,0.75D,405
SJ19
GB,0.75D,915
C0073-4
SWITCH-WASHER-REAR SCREEN (S114)
SJ64 (UB) MAIN
MOTOR-HEADLAMP LEVELLING-LH (M130)
C0071-2
UB,0.75D,1890
SJ64
UB,0.75D,2475
C0070-2
MOTOR-HEADLAMP LEVELLING-RH (M129)
UB,0.75D,580
C0067-4 C0229-4
UB,0.75D,1540
C0093-1
SWITCH-HEADLAMP LEVELLING (S109)
SJ22 (LGW) MAIN + SJ3 (LGW) HIGH-LINE AUDIO
FUSE BOX-PASSENGER COMPARTMENT (P101)
C0580-1
LGW,0.75D,770
SJ22
LGW,0.75D,610
C0430-6
CENTRAL CONTROL UNIT (CCU) (D170)
LGW,0.75D,1300
C1023-4 C0420-4
RADIO REMOTE DISPLAY (F101)
C0241-3
LGW,0.75D,1140
C0229-18 C0067-18
LGW,0.75D,840
HEAD UNIT-AUDIO SYSTEM (F186)
C0921-7
LGW,0.5D,550
LGW,0.5D,350
SJ3
LGW,0.5D,200
(MID-LINE AUDIO)
(HIGH-LINE AUDIO)
(LOW-LINE AUDIO)
MODULE-ICE INTERFACE (D239)
C1897-1
LGW,0.5D,605
LGW,0.5D,550
C0098-5
HEAD UNIT-AUDIO SYSTEM (F186)

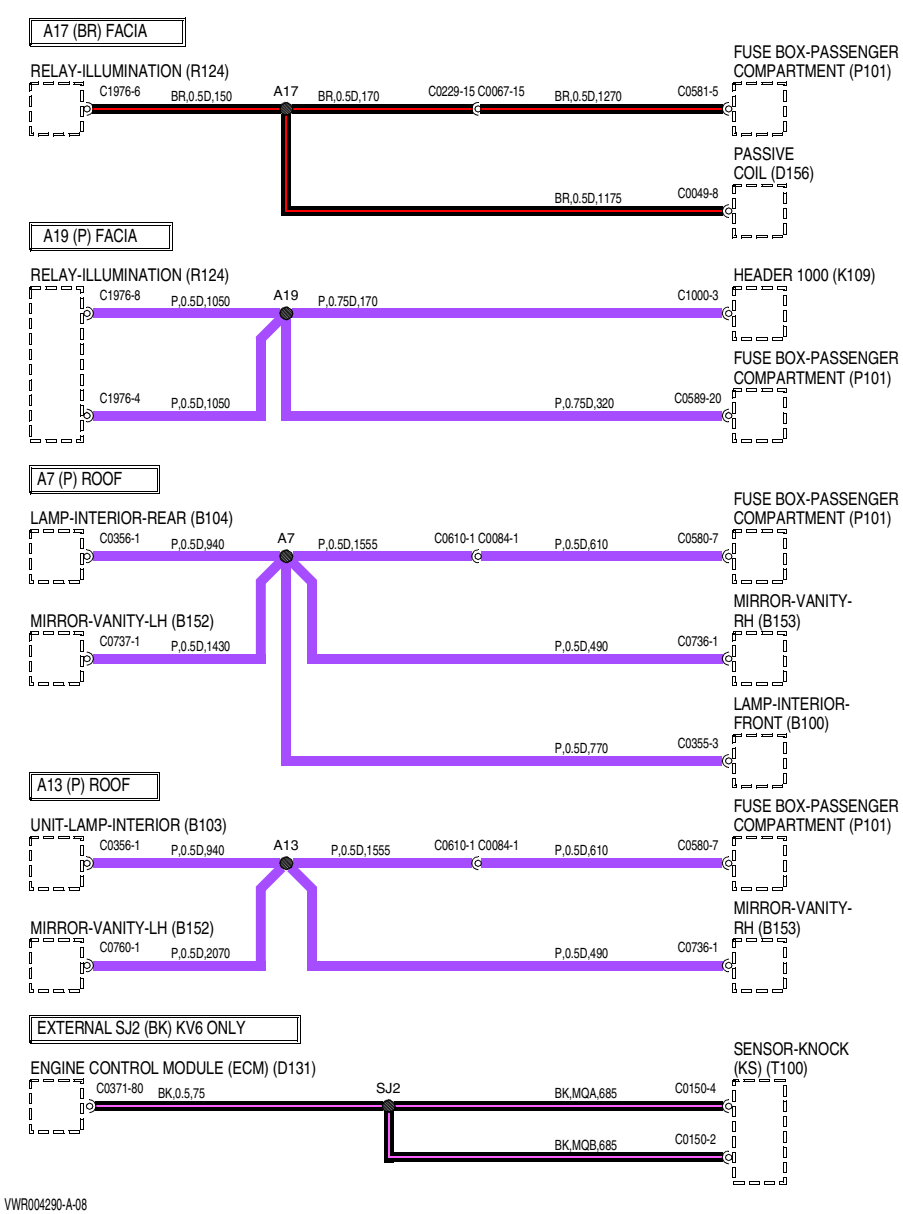
A17 (BR) FACIA
RELAY-ILLUMINATION (R124)
C1976-6
BR,0.5D,150
A17
BR,0.5D,170
C0229-15 C0067-15
BR,0.5D,1270
C0581-5
FUSE BOX-PASSENGER COMPARTMENT (P101)
PASSIVE COIL (D156)
BR,0.5D,1175
C0049-8
A19 (P) FACIA
RELAY-ILLUMINATION (R124)
C1976-8
P,0.5D,1050
A19
P,0.75D,170
C1000-3
HEADER 1000 (K109)
FUSE BOX-PASSENGER COMPARTMENT (P101)
C1976-4
P,0.5D,1050
P,0.75D,320
C0589-20
A7 (P) ROOF
LAMP-INTERIOR-REAR (B104)
C0356-1
P,0.5D,940
A7
P,0.5D,1555
C0610-1 C0084-1
P,0.5D,610
C0580-7
FUSE BOX-PASSENGER COMPARTMENT (P101)
MIRROR-VANITY-LH (B152)
C0737-1
P,0.5D,1430
P,0.5D,490
C0736-1
MIRROR-VANITY-RH (B153)
P,0.5D,770
C0355-3
LAMP-INTERIOR-FRONT (B100)
A13 (P) ROOF
UNIT-LAMP-INTERIOR (B103)
C0356-1
P,0.5D,940
A13
P,0.5D,1555
C0610-1 C0084-1
P,0.5D,610
C0580-7
FUSE BOX-PASSENGER COMPARTMENT (P101)
MIRROR-VANITY-LH (B152)
C0760-1
P,0.5D,2070
P,0.5D,490
C0736-1
MIRROR-VANITY-RH (B153)
EXTERNAL SJ2 (BK) KV6 ONLY
ENGINE CONTROL MODULE (ECM) (D131)
C0371-80
BK,0.5,75
SJ2
BK,MQA,685
C0150-4
BK,MQB,685
C0150-2
SENSOR-KNOCK (KS) (T100)
VWR004290-A-08

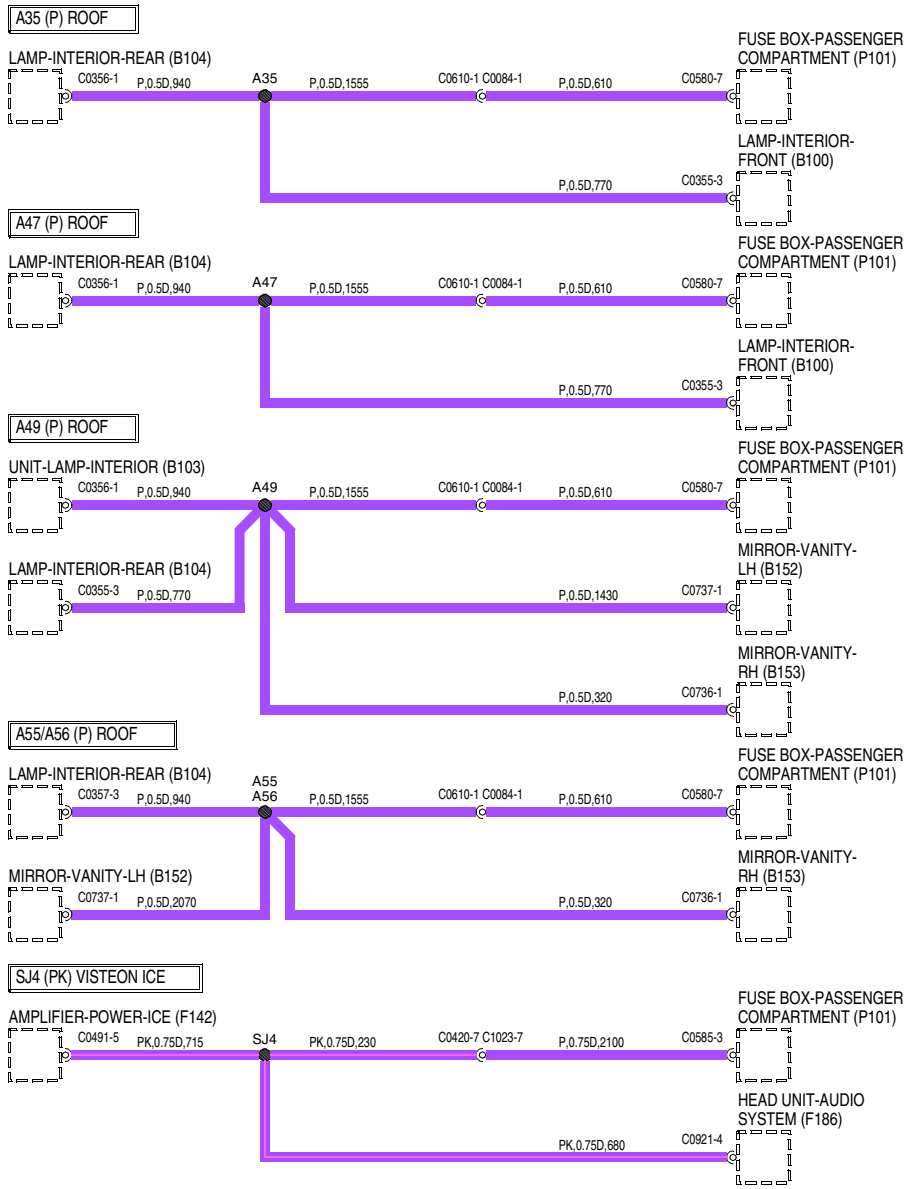
A35 (P) ROOF
LAMP-INTERIOR-REAR (B104)
C0356-1
P,0.5D,940
A35
P,0.5D,1555
C0610-1 C0084-1
P,0.5D,610
C0580-7
FUSE BOX-PASSENGER COMPARTMENT (P101)
LAMP-INTERIOR-FRONT (B100)
P,0.5D,770
C0355-3
A47 (P) ROOF
LAMP-INTERIOR-REAR (B104)
C0356-1
P,0.5D,940
A47
P,0.5D,1555
C0610-1 C0084-1
P,0.5D,610
C0580-7
FUSE BOX-PASSENGER COMPARTMENT (P101)
LAMP-INTERIOR-FRONT (B100)
P,0.5D,770
C0355-3
A49 (P) ROOF
UNIT-LAMP-INTERIOR (B103)
C0356-1
P,0.5D,940
A49
P,0.5D,1555
C0610-1 C0084-1
P,0.5D,610
C0580-7
FUSE BOX-PASSENGER COMPARTMENT (P101)
LAMP-INTERIOR-REAR (B104)
C0355-3
P,0.5D,770
MIRROR-VANITY-LH (B152)
P,0.5D,1430
C0737-1
MIRROR-VANITY-RH (B153)
P,0.5D,320
C0736-1
A55/A56 (P) ROOF
LAMP-INTERIOR-REAR (B104)
C0357-3
P,0.5D,940
A55
A56
P,0.5D,1555
C0610-1 C0084-1
P,0.5D,610
C0580-7
FUSE BOX-PASSENGER COMPARTMENT (P101)
MIRROR-VANITY-LH (B152)
C0737-1
P,0.5D,2070
P,0.5D,320
C0736-1
MIRROR-VANITY-RH (B153)
SJ4 (PK) VISTEON ICE
AMPLIFIER-POWER-ICE (F142)
C0491-5
PK,0.75D,715
SJ4
PK,0.75D,230
C0420-7 C1023-7
P,0.75D,2100
C0585-3
FUSE BOX-PASSENGER COMPARTMENT (P101)
HEAD UNIT-AUDIO SYSTEM (F186)
PK,0.75D,680
C0921-4

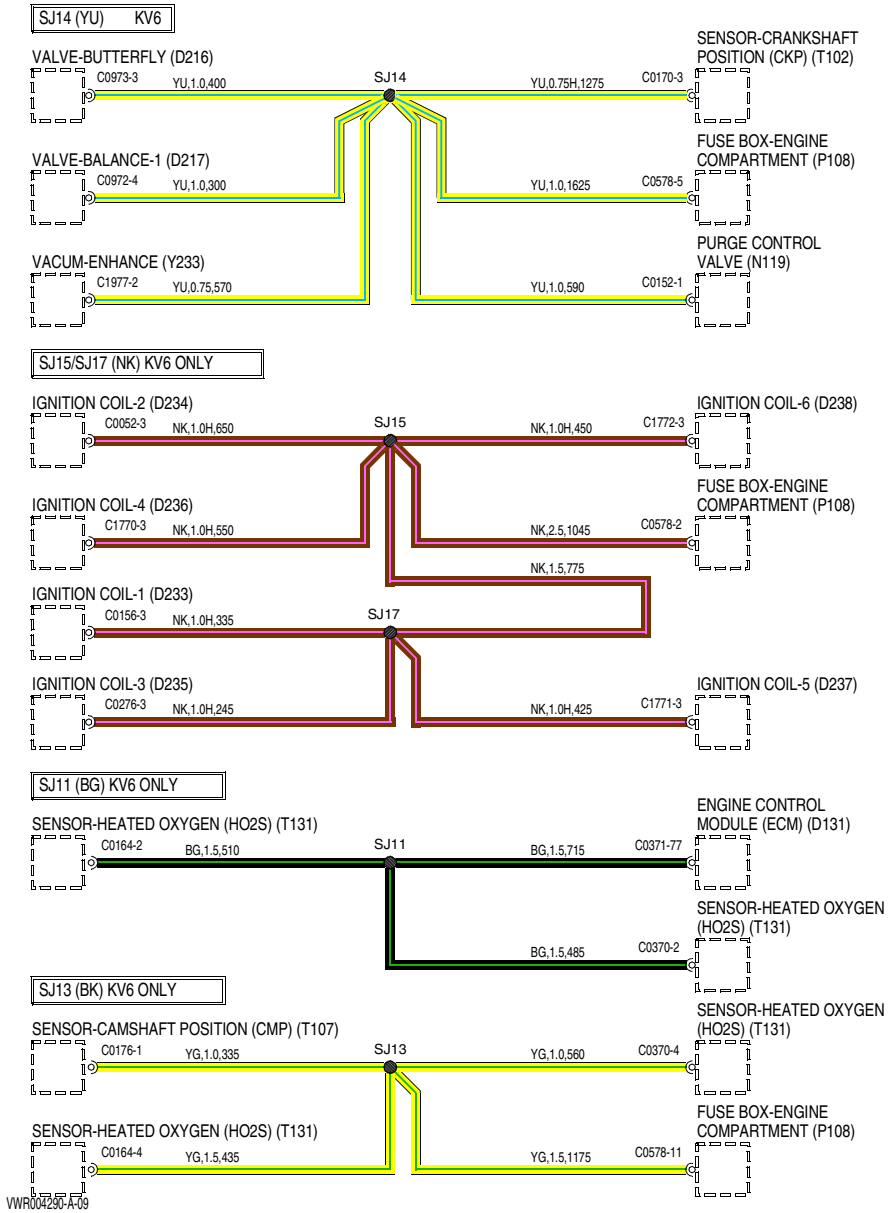
SJ14 (YU) KV6
VALVE-BUTTERFLY (D216)
C0973-3
YU,1.0,400
SJ14
YU,0.75H,1275
C0170-3
SENSOR-CRANKSHAFT POSITION (CKP) (T102)
VALVE-BALANCE-1 (D217)
C0972-4
YU,1.0,300
YU,1.0,1625
C0578-5
FUSE BOX-ENGINE COMPARTMENT (P108)
VACUM-ENHANCE (Y233)
C1977-2
YU,0.75,570
YU,1.0,590
C0152-1
PURGE CONTROL VALVE (N119)
SJ15/SJ17 (NK) KV6 ONLY
IGNITION COIL-2 (D234)
C0052-3
NK,1.0H,650
SJ15
NK,1.0H,450
C1772-3
IGNITION COIL-6 (D238)
IGNITION COIL-4 (D236)
C1770-3
NK,1.0H,550
NK,2.5,1045
C0578-2
FUSE BOX-ENGINE COMPARTMENT (P108)
NK,1.5,775
IGNITION COIL-1 (D233)
C0156-3
NK,1.0H,335
SJ17
IGNITION COIL-3 (D235)
C0276-3
NK,1.0H,245
NK,1.0H,425
C1771-3
IGNITION COIL-5 (D237)
SJ11 (BG) KV6 ONLY
SENSOR-HEATED OXYGEN (HO2S) (T131)
C0164-2
BG,1.5,510
SJ11
BG,1.5,715
C0371-77
ENGINE CONTROL MODULE (ECM) (D131)
BG,1.5,485
C0370-2
SENSOR-HEATED OXYGEN (HO2S) (T131)
SJ13 (BK) KV6 ONLY
SENSOR-CAMSHAFT POSITION (CMP) (T107)
C0176-1
YG,1.0,335
SJ13
YG,1.0,560
C0370-4
SENSOR-HEATED OXYGEN (HO2S) (T131)
SENSOR-HEATED OXYGEN (HO2S) (T131)
C0164-4
YG,1.5,435
YG,1.5,1175
C0578-11
FUSE BOX-ENGINE COMPARTMENT (P108)
VWR004290-A-09

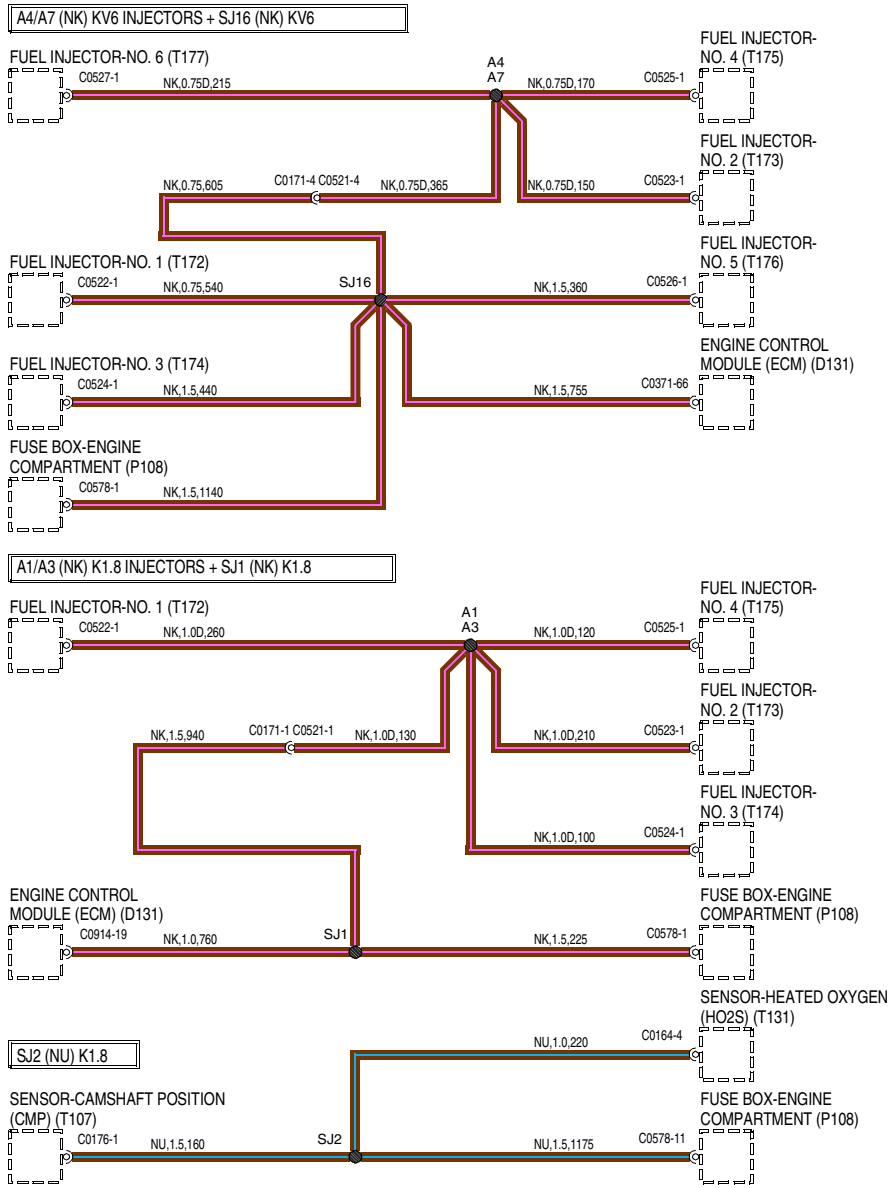
A4/A7 (NK) KV6 INJECTORS + SJ16 (NK) KV6
FUEL INJECTOR-NO. 6 (T177)
C0527-1
NK,0.75D,215
A4
A7
NK,0.75D,170
C0525-1
FUEL INJECTOR-NO. 4 (T175)
NK,0.75,605
C0171-4 C0521-4
NK,0.75D,365
NK,0.75D,150
C0523-1
FUEL INJECTOR-NO. 2 (T173)
FUEL INJECTOR-NO. 1 (T172)
C0522-1
NK,0.75,540
SJ16
NK,1.5,360
C0526-1
FUEL INJECTOR-NO. 5 (T176)
FUEL INJECTOR-NO. 3 (T174)
C0524-1
NK,1.5,440
NK,1.5,755
C0371-66
ENGINE CONTROL MODULE (ECM) (D131)
FUSE BOX-ENGINE COMPARTMENT (P108)
C0578-1
NK,1.5,1140
A1/A3 (NK) K1.8 INJECTORS + SJ1 (NK) K1.8
FUEL INJECTOR-NO. 1 (T172)
C0522-1
NK,1.0D,260
A1
A3
NK,1.0D,120
C0525-1
FUEL INJECTOR-NO. 4 (T175)
NK,1.5,940
C0171-1 C0521-1
NK,1.0D,130
NK,1.0D,210
C0523-1
FUEL INJECTOR-NO. 2 (T173)
NK,1.0D,100
C0524-1
FUEL INJECTOR-NO. 3 (T174)
ENGINE CONTROL MODULE (ECM) (D131)
C0914-19
NK,1.0,760
SJ1
NK,1.5,225
C0578-1
FUSE BOX-ENGINE COMPARTMENT (P108)
SJ2 (NU) K1.8
NU,1.0,220
C0164-4
SENSOR-HEATED OXYGEN (HO2S) (T131)
SENSOR-CAMSHAFT POSITION (CMP) (T107)
C0176-1
NU,1.5,160
SJ2
NU,1.5,1175
C0578-11
FUSE BOX-ENGINE COMPARTMENT (P108)

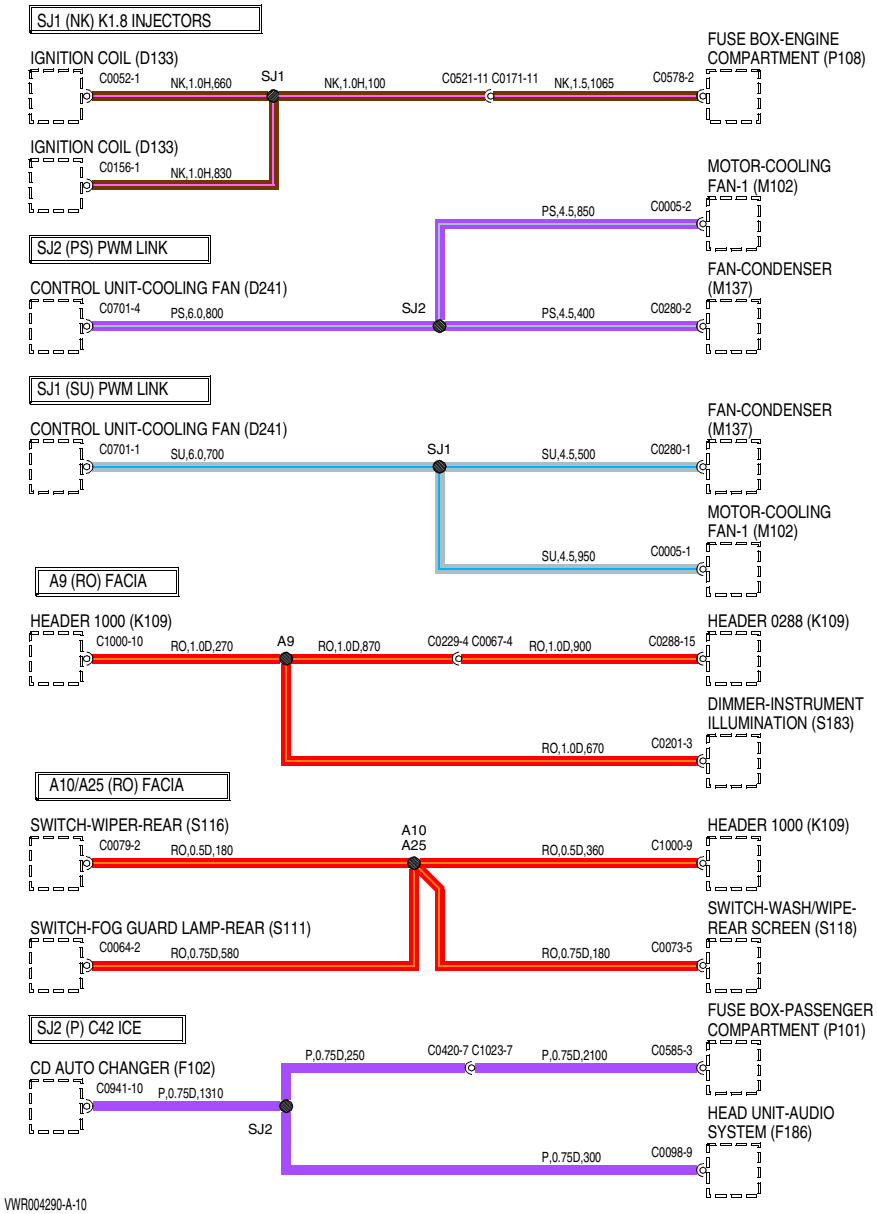
SJ1 (NK) K1.8 INJECTORS
IGNITION COIL (D133)
C0052-1
NK,1.0H,660
SJ1
NK,1.0H,100
C0521-11 C0171-11
NK,1.5,1065
C0578-2
FUSE BOX-ENGINE COMPARTMENT (P108)
IGNITION COIL (D133)
C0156-1
NK,1.0H,830
MOTOR-COOLING FAN-1 (M102)
PS,4.5,850
C0005-2
SJ2 (PS) PWM LINK
CONTROL UNIT-COOLING FAN (D241)
C0701-4
PS,6.0,800
SJ2
PS,4.5,400
C0280-2
FAN-CONDENSER (M137)
SJ1 (SU) PWM LINK
CONTROL UNIT-COOLING FAN (D241)
C0701-1
SU,6.0,700
SJ1
SU,4.5,500
C0280-1
FAN-CONDENSER (M137)
MOTOR-COOLING FAN-1 (M102)
SU,4.5,950
C0005-1
A9 (RO) FACIA
HEADER 1000 (K109)
C1000-10
RO,1.0D,270
A9
RO,1.0D,870
C0229-4 C0067-4
RO,1.0D,900
C0288-15
HEADER 0288 (K109)
DIMMER-INSTRUMENT ILLUMINATION (S183)
RO,1.0D,670
C0201-3
A10/A25 (RO) FACIA
SWITCH-WIPER-REAR (S116)
C0079-2
RO,0.5D,180
A10
A25
RO,0.5D,360
C1000-9
HEADER 1000 (K109)
SWITCH-FOG GUARD LAMP-REAR (S111)
C0064-2
RO,0.75D,580
RO,0.75D,180
C0073-5
SWITCH-WASH/WIPE-REAR SCREEN (S118)
SJ2 (P) C42 ICE
CD AUTO CHANGER (F102)
C0941-10
P,0.75D,1310
SJ2
P,0.75D,250
C0420-7 C1023-7
P,0.75D,2100
C0585-3
FUSE BOX-PASSENGER COMPARTMENT (P101)
P,0.75D,300
C0098-9
HEAD UNIT-AUDIO SYSTEM (F186)
VWR004290-A-10

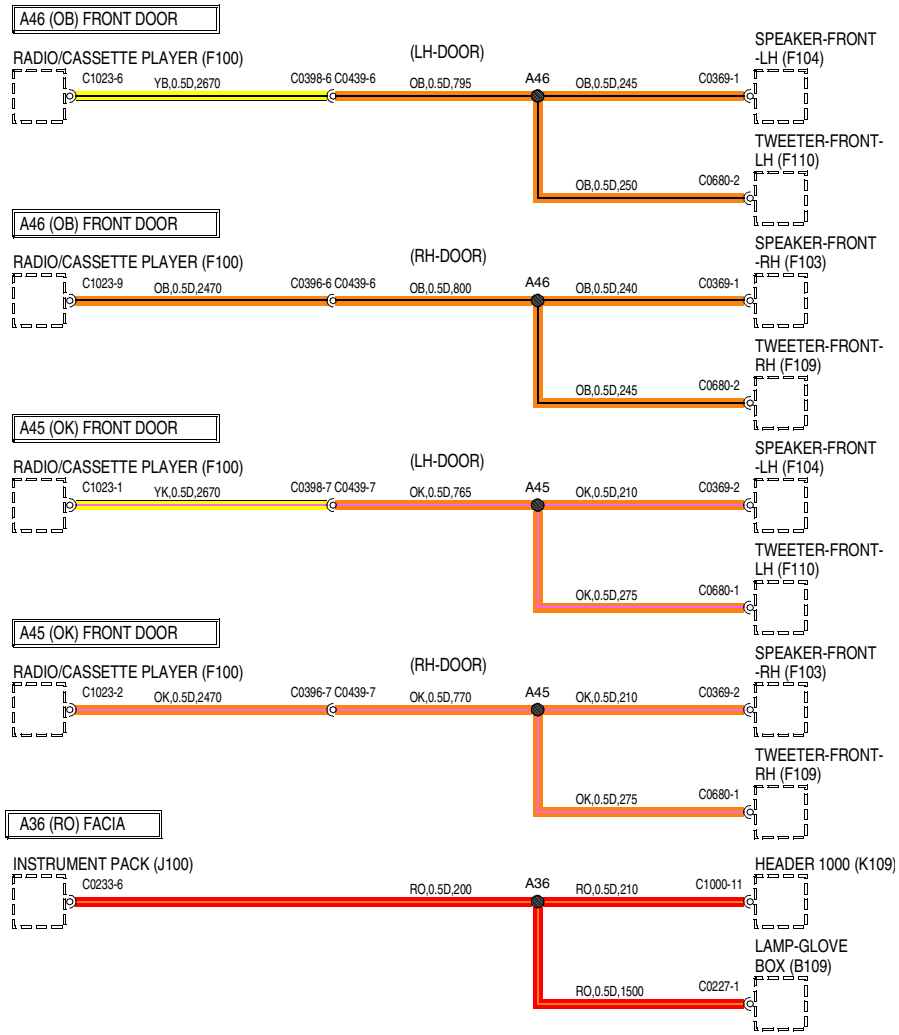
A46 (OB) FRONT DOOR
RADIO/CASSETTE PLAYER (F100)
C1023-6
YB,0.5D,2670
C0398-6 C0439-6
(LH-DOOR)
OB,0.5D,795
A46
OB,0.5D,245
C0369-1
SPEAKER-FRONT -LH (F104)
OB,0.5D,250
C0680-2
TWEETER-FRONT-LH (F110)
A46 (OB) FRONT DOOR
RADIO/CASSETTE PLAYER (F100)
C1023-9
OB,0.5D,2470
C0396-6 C0439-6
(RH-DOOR)
OB,0.5D,800
A46
OB,0.5D,240
C0369-1
SPEAKER-FRONT -RH (F103)
OB,0.5D,245
C0680-2
TWEETER-FRONT-RH (F109)
A45 (OK) FRONT DOOR
RADIO/CASSETTE PLAYER (F100)
C1023-1
YK,0.5D,2670
C0398-7 C0439-7
(LH-DOOR)
OK,0.5D,765
A45
OK,0.5D,210
C0369-2
SPEAKER-FRONT -LH (F104)
OK,0.5D,275
C0680-1
TWEETER-FRONT-LH (F110)
A45 (OK) FRONT DOOR
RADIO/CASSETTE PLAYER (F100)
C1023-2
OK,0.5D,2470
C0396-7 C0439-7
(RH-DOOR)
OK,0.5D,770
A45
OK,0.5D,210
C0369-2
SPEAKER-FRONT -RH (F103)
OK,0.5D,275
C0680-1
TWEETER-FRONT-RH (F109)
A36 (RO) FACIA
INSTRUMENT PACK (J100)
C0233-6
RO,0.5D,200
A36
RO,0.5D,210
C1000-11
HEADER 1000 (K109)
RO,0.5D,1500
C0227-1
LAMP-GLOVE BOX (B109)

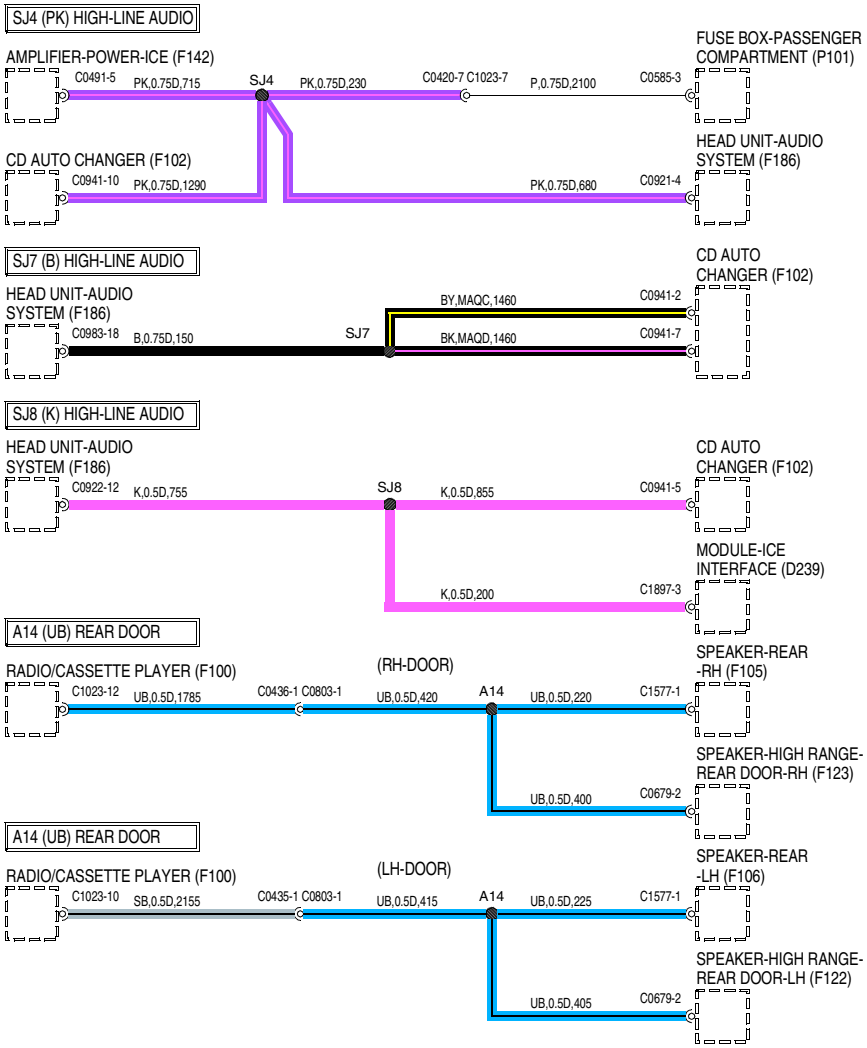

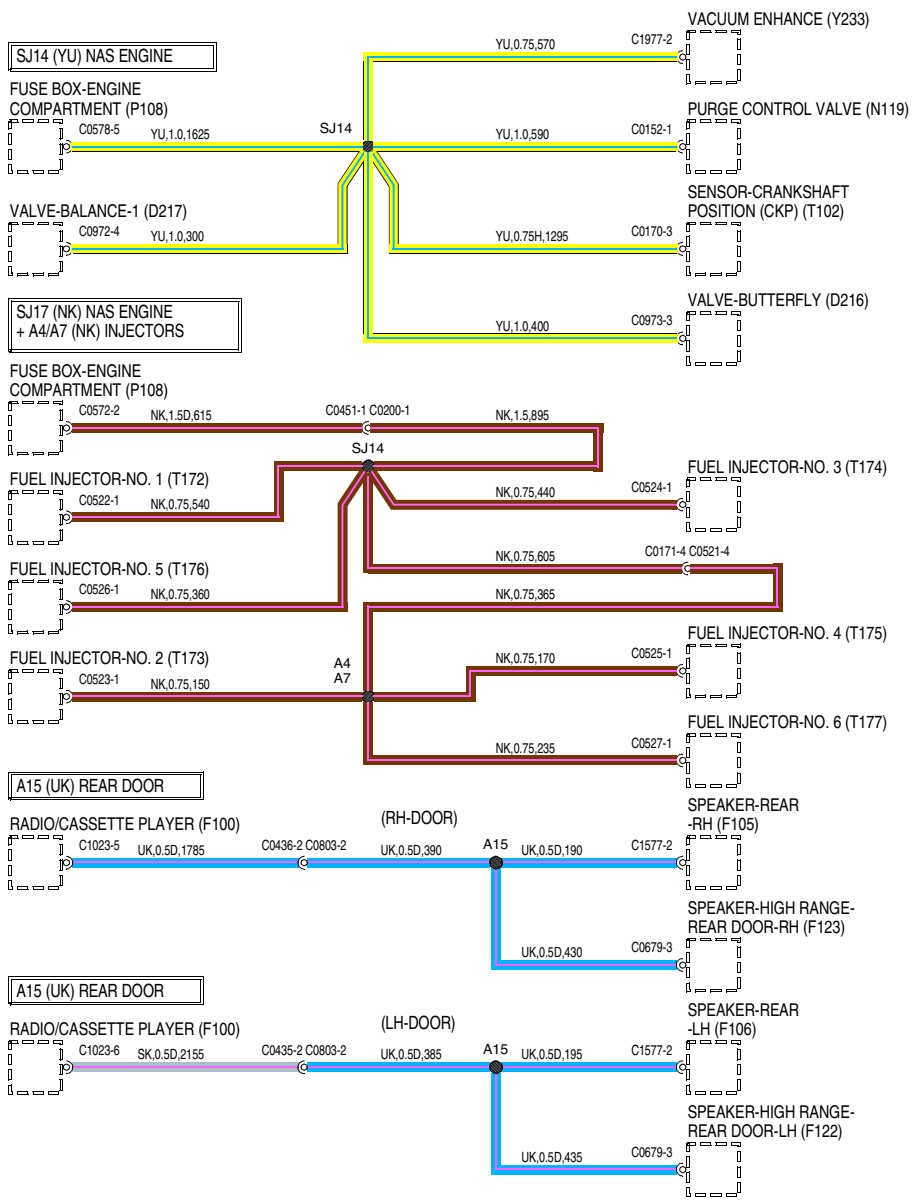

VWR004290-A-11

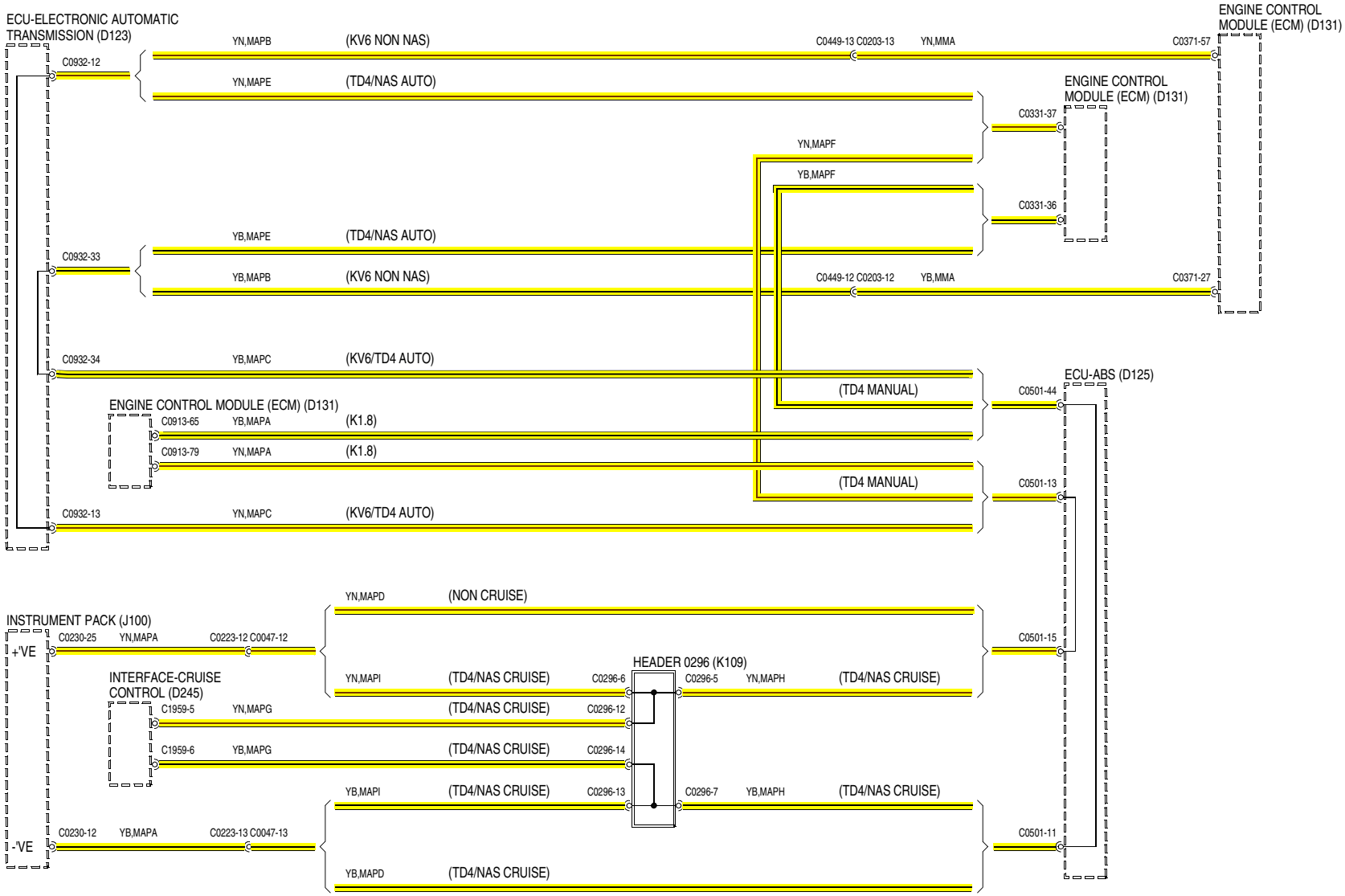

VWR003990-A-01